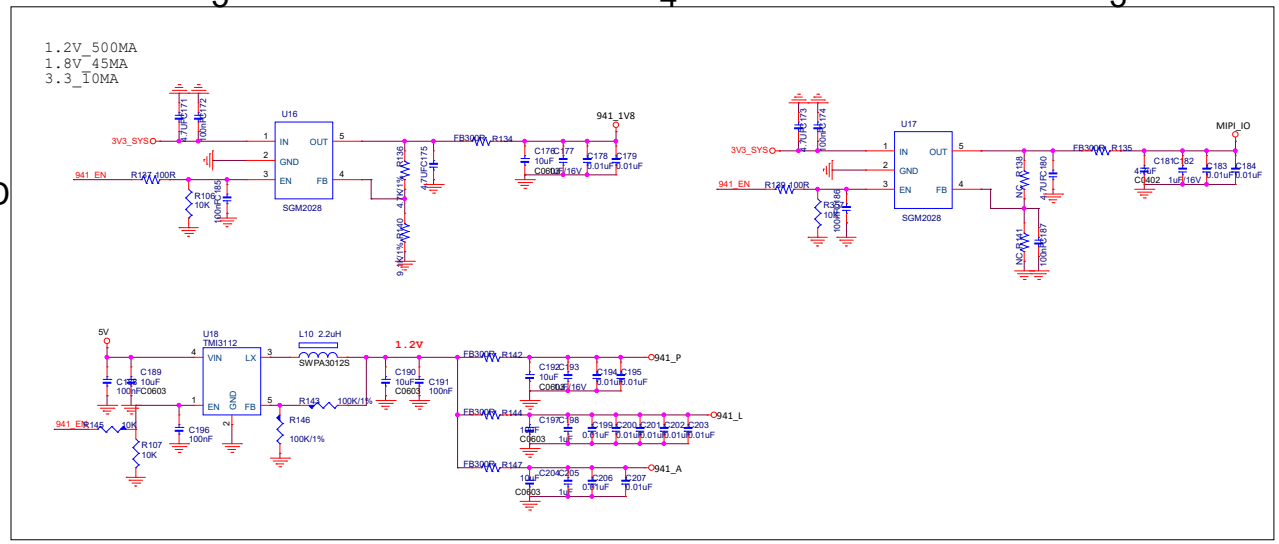

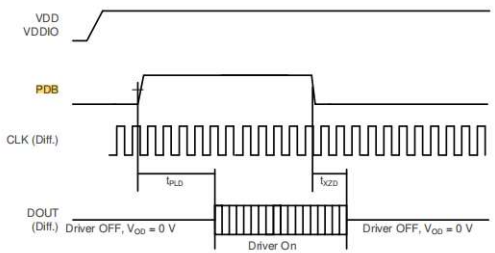

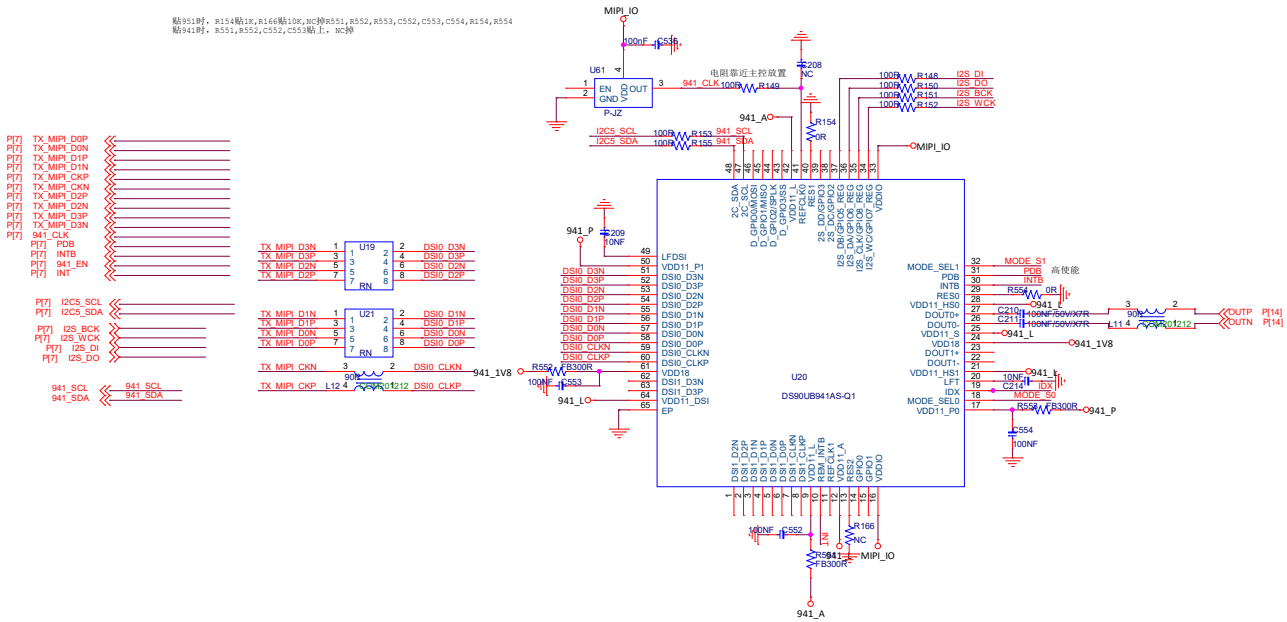

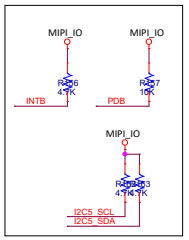

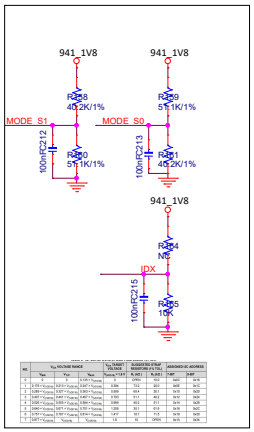

Title	<Title>		
Size A2	Document Number <Doc>		Rev <RevCode>
Date: Friday, August 23, 2024	Sheet 10 of 17		