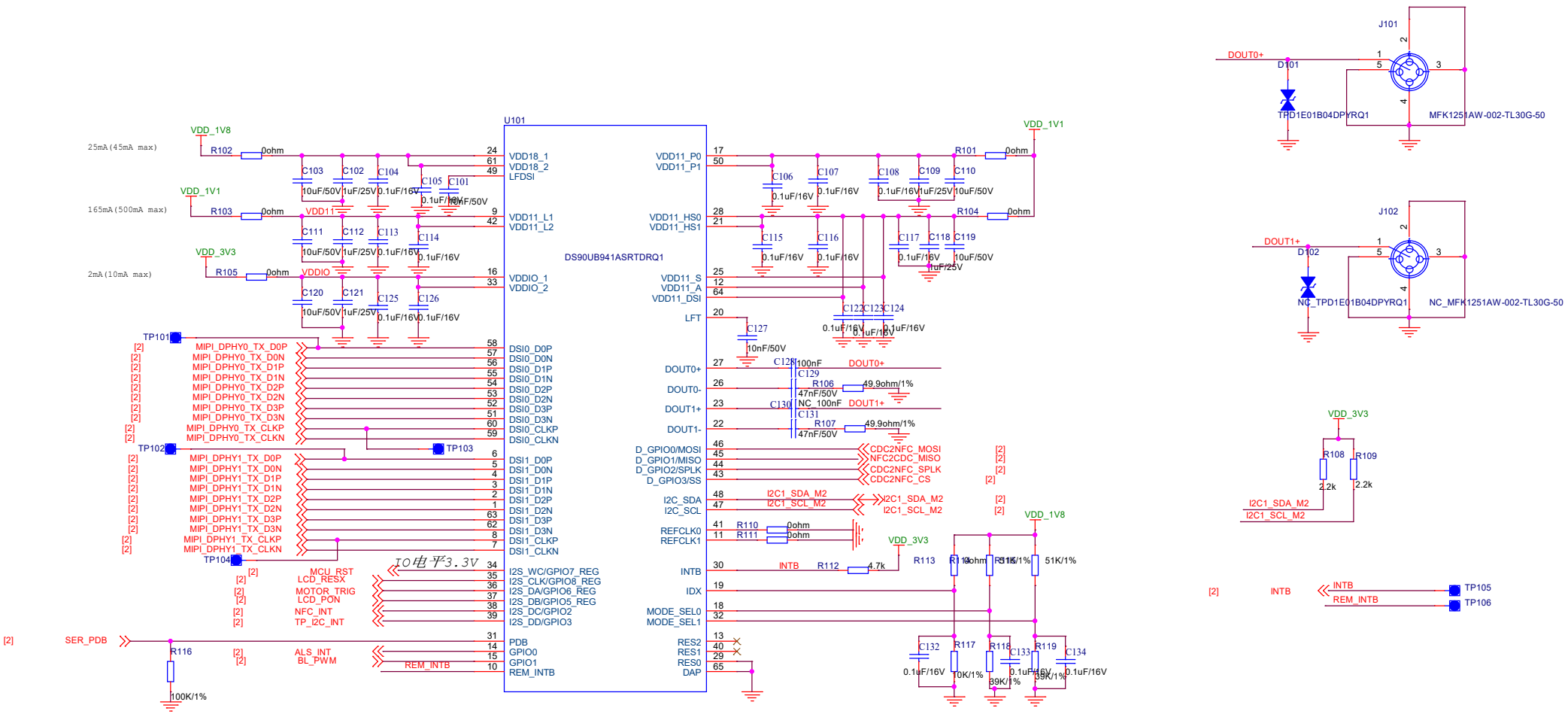

Title	<Title>	
Size A3	Document Number <Doc>	Rev <RevCode>
Date: Thursday, October 27, 2022	Sheet 1 of 3	