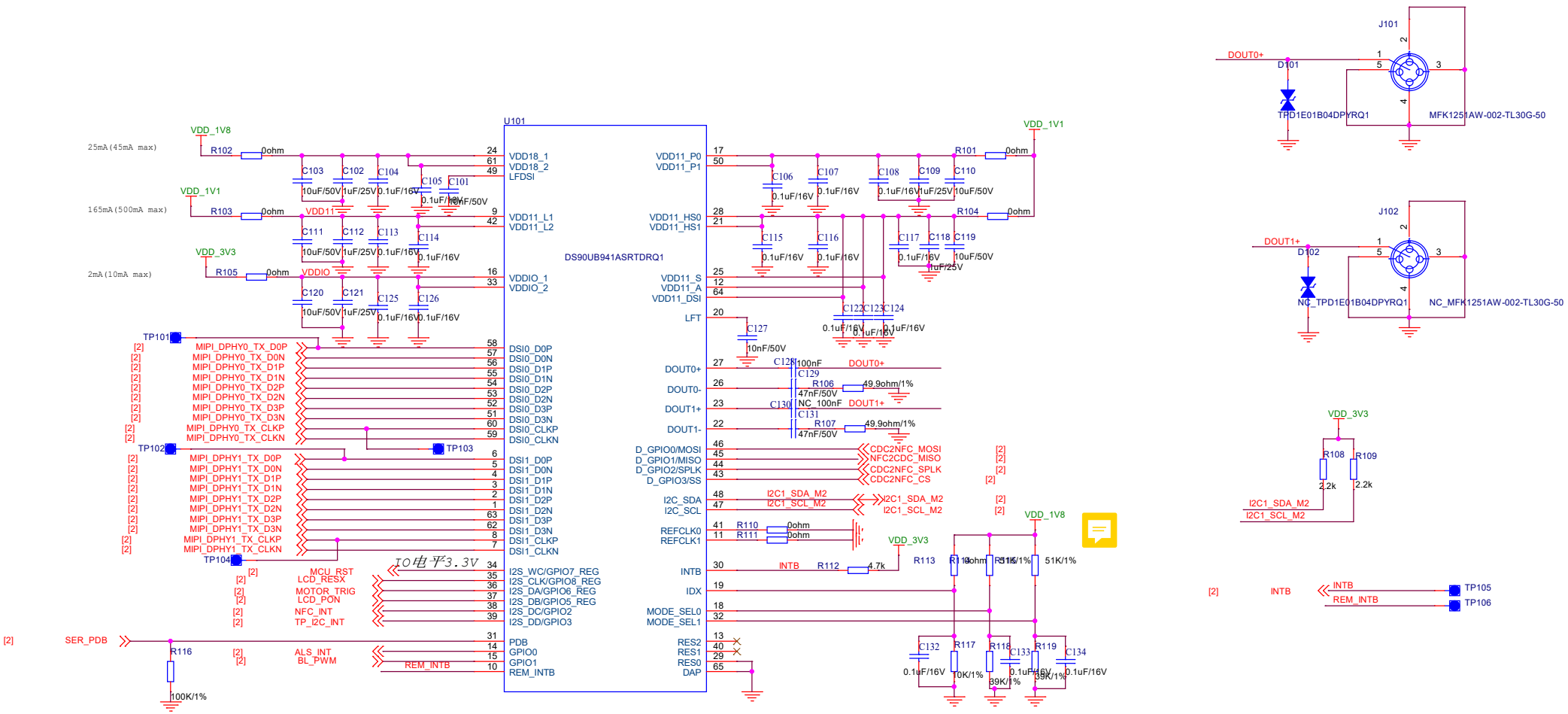

Title	<Title>		
Size A3	Document Number <Doc>		Rev <RevCode>
Date: Thursday, October 27, 2022		Sheet 1 of 3	