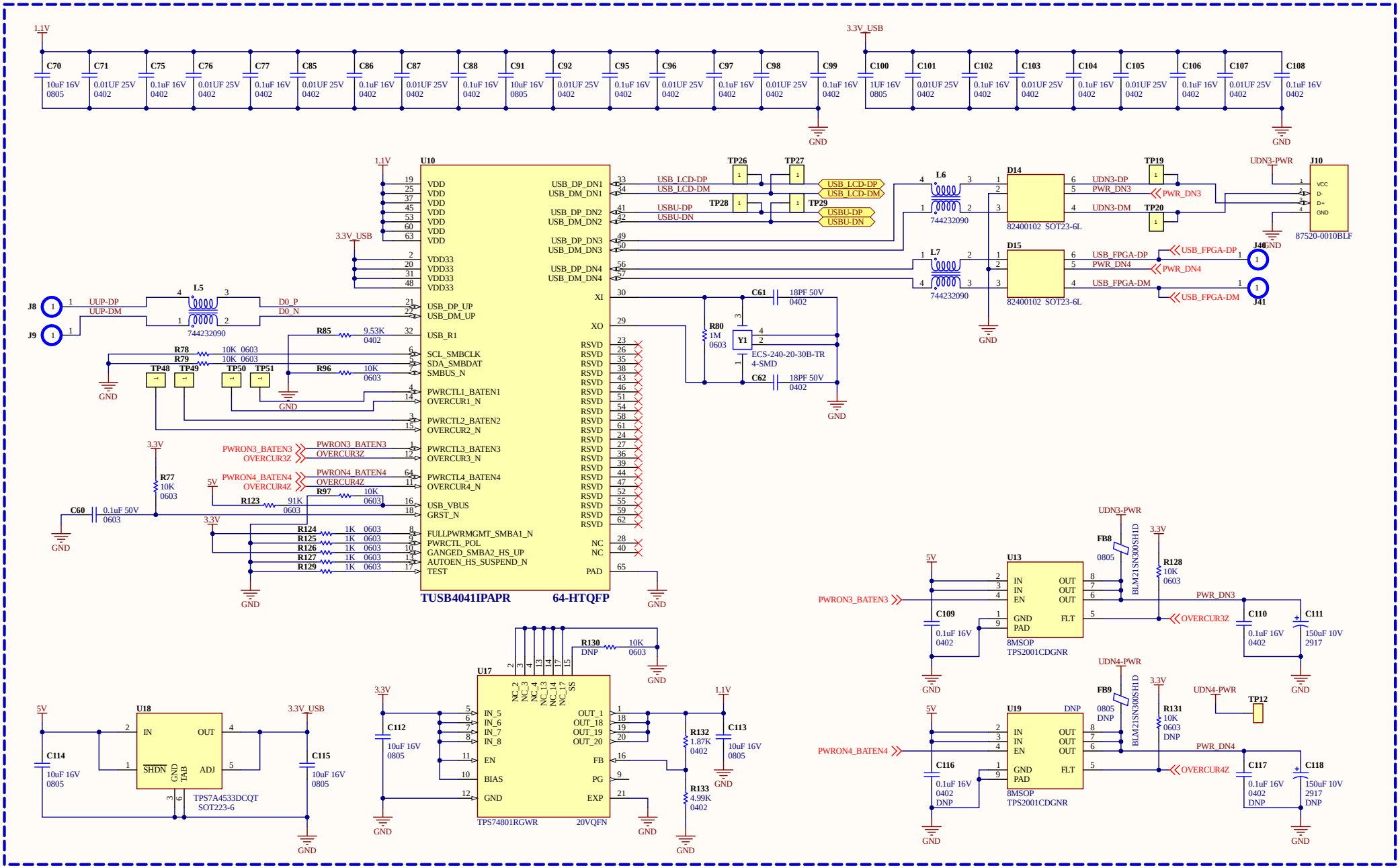

NOTE: THIS DRAWING AND CONTENTS ARE CONFIDENTIAL AND ARE NOT TO BE COPIED

AMBIMAT ELECTRONICS

TITLE:	USB Hub
Document Number:	SCH_AE165
22-07-2024	Rev: 02.03
Sheet: 7 of 16	