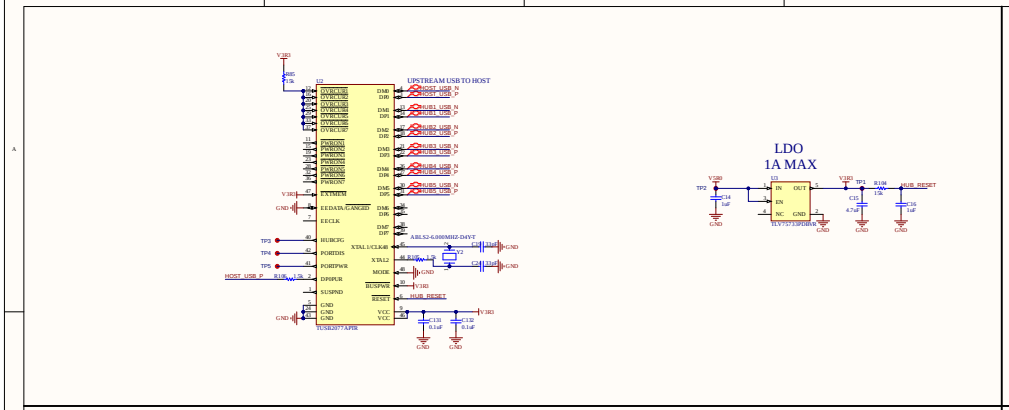

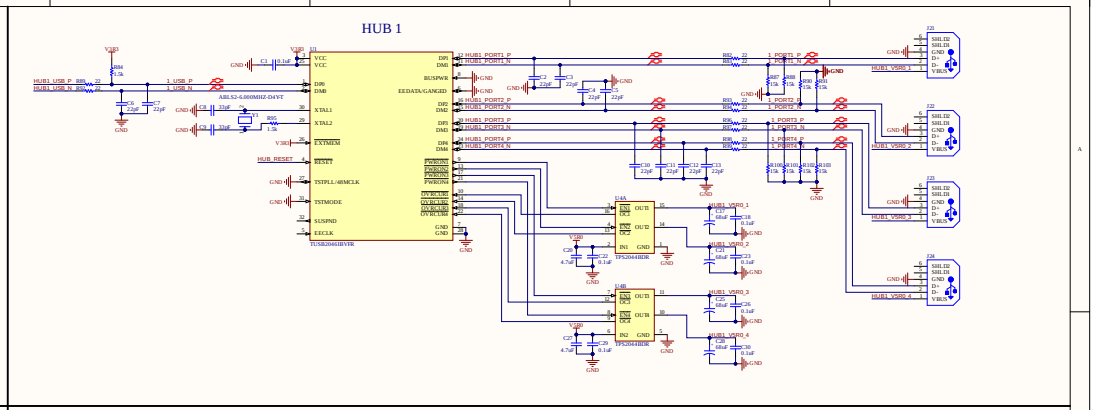

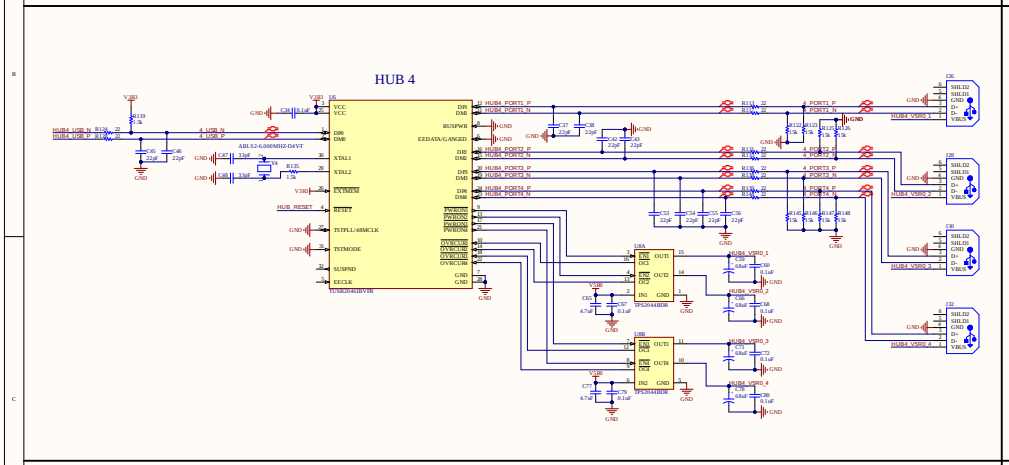

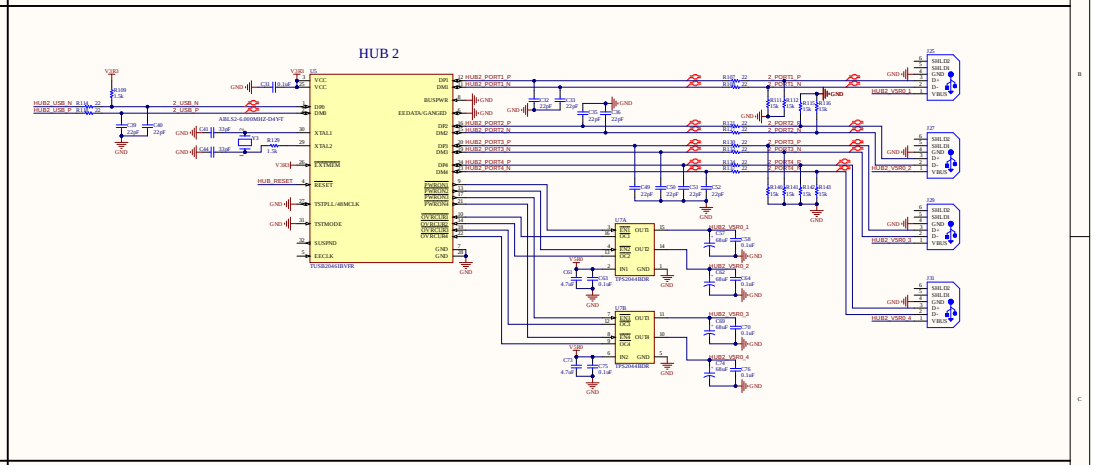

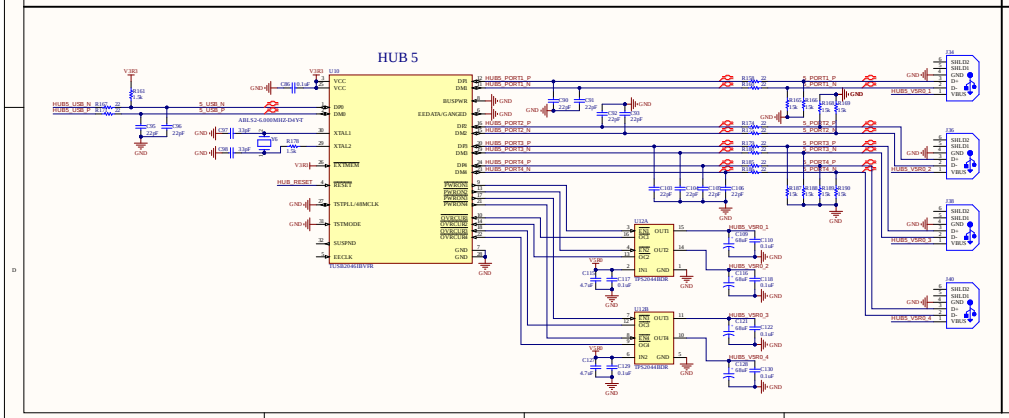

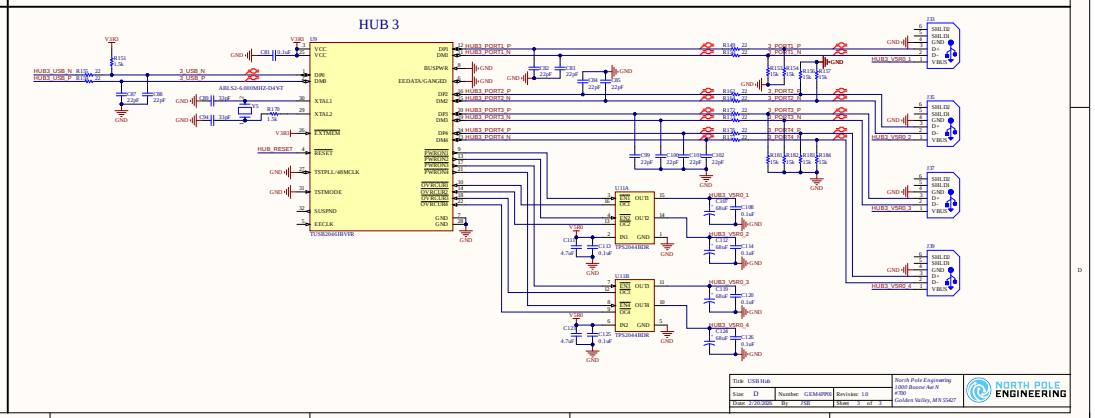

Title: USB Hub			North Pole Engineering 1900 Boone Ave N #780 Golden Valley, MN 55427
Size: D	Number: GSM4990	Revision: 1.0	
Date: 2/20/2026	By: JMB	Sheet 3 of 3	

NORTH POLE ENGINEERING