RF SHIELD

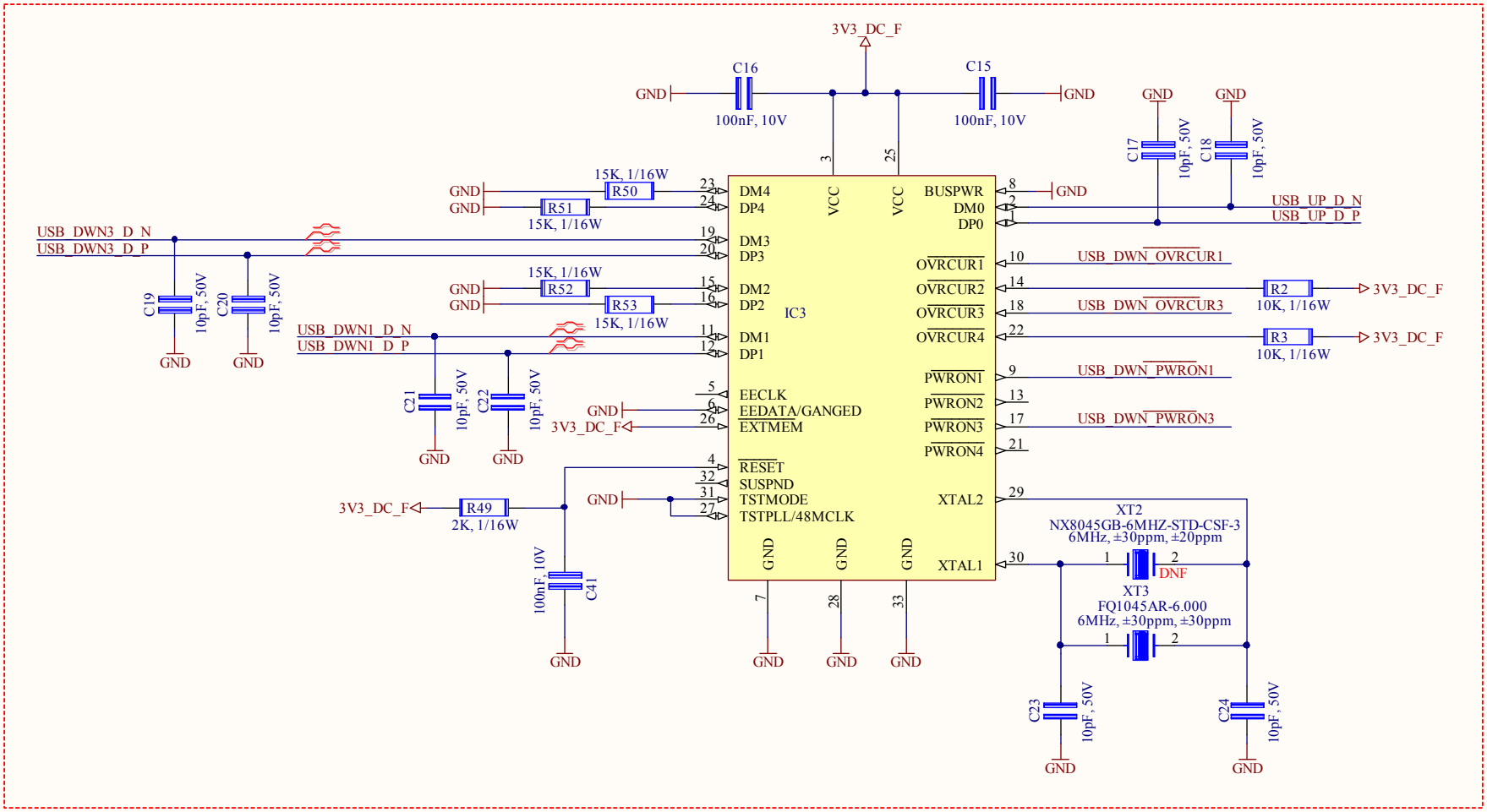
3V3_DC_F
C16
100nF, 10V
C15
100nF, 10V
GND
C17
10pF, 50V
C18
10pF, 50V
15K, 1/16W
R50
R51
R52
R53
USB_DWN3_D_N
USB_DWN3_D_P
USB_DWN1_D_N
USB_DWN1_D_P
C19
10pF, 50V
C20
10pF, 50V
C21
10pF, 50V
C22
10pF, 50V
IC3
DM4
DP4
DM3
DP3
DM2
DP2
DM1
DP1
EECLK
EEDATA/GANGED
EXTMEM
RESET
SUSPND
TSTMODE
TSTPLL/48MCLK
VCC
BUSPWR
DM0
DP0
OVRCUR1
OVRCUR2
OVRCUR3
OVRCUR4
PWRON1
PWRON2
PWRON3
PWRON4
XTAL2
XTAL1
USB_UP_D_N
USB_UP_D_P
USB_DWN_OVRCUR1
USB_DWN_OVRCUR3
USB_DWN_PWRON1
USB_DWN_PWRON3
R2
10K, 1/16W
R3
10K, 1/16W
R49
2K, 1/16W
C41
100nF, 10V
XT2
NX8045GB-6MHZ-STD-CSF-3
6MHz, ±30ppm, ±20ppm
DNF
XT3
FQ1045AR-6.000
6MHz, ±30ppm, ±30ppm
C23
10pF, 50V
C24
10pF, 50V