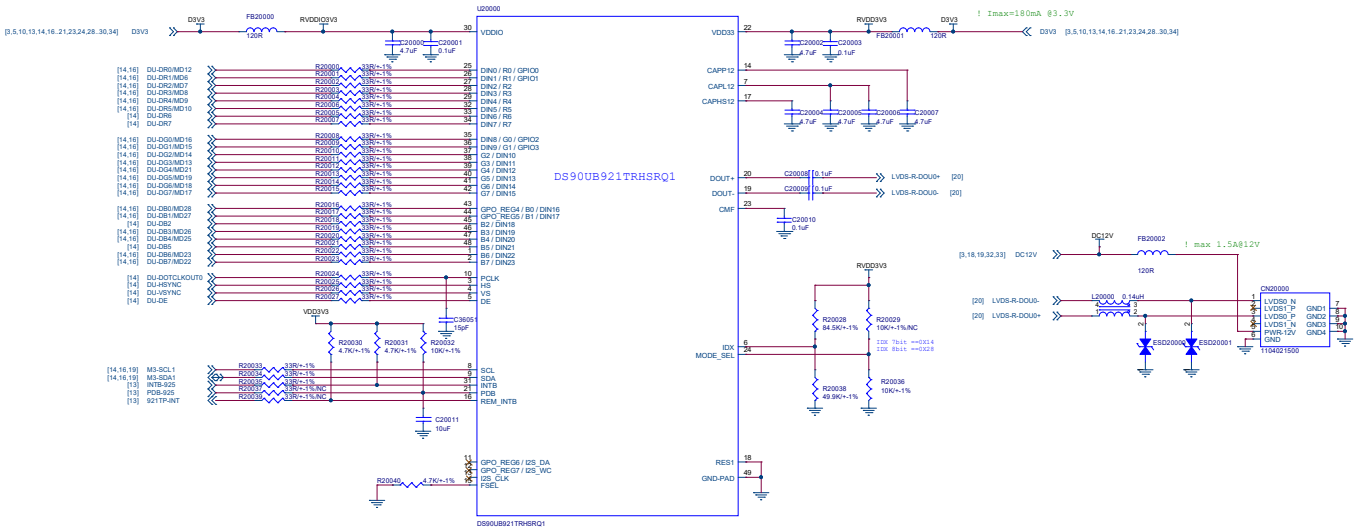

<Variant Name>

Title	<Title>	
Size C	Document Number <Doc>	Rev <RevCode>
Date: Friday, April 10, 2020	Sheet 20 of 38	