DSI FPD LINK

"For this version FPD-Link III Interface (PDS90UB941ASRTDTQ1) supported"

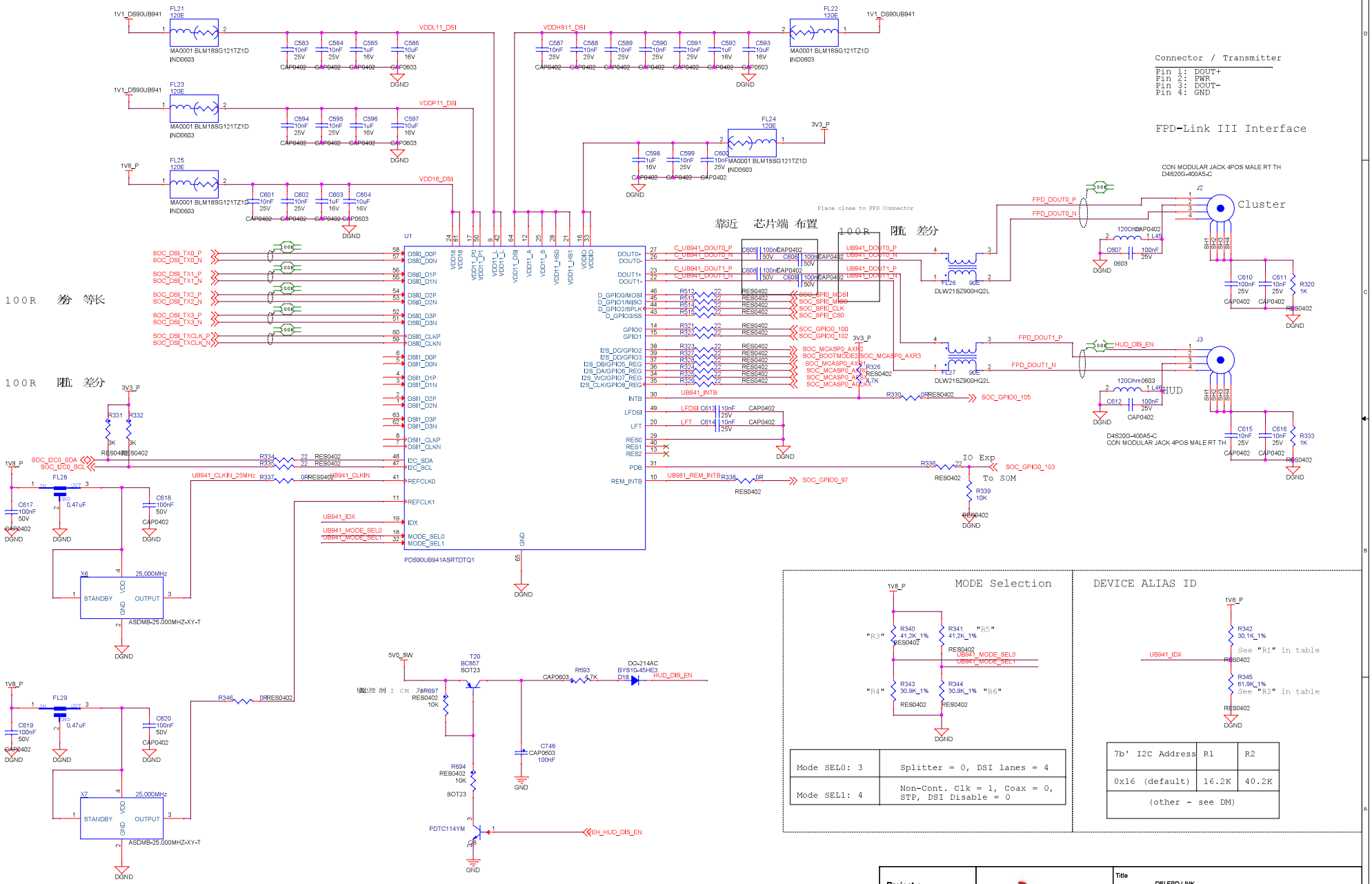

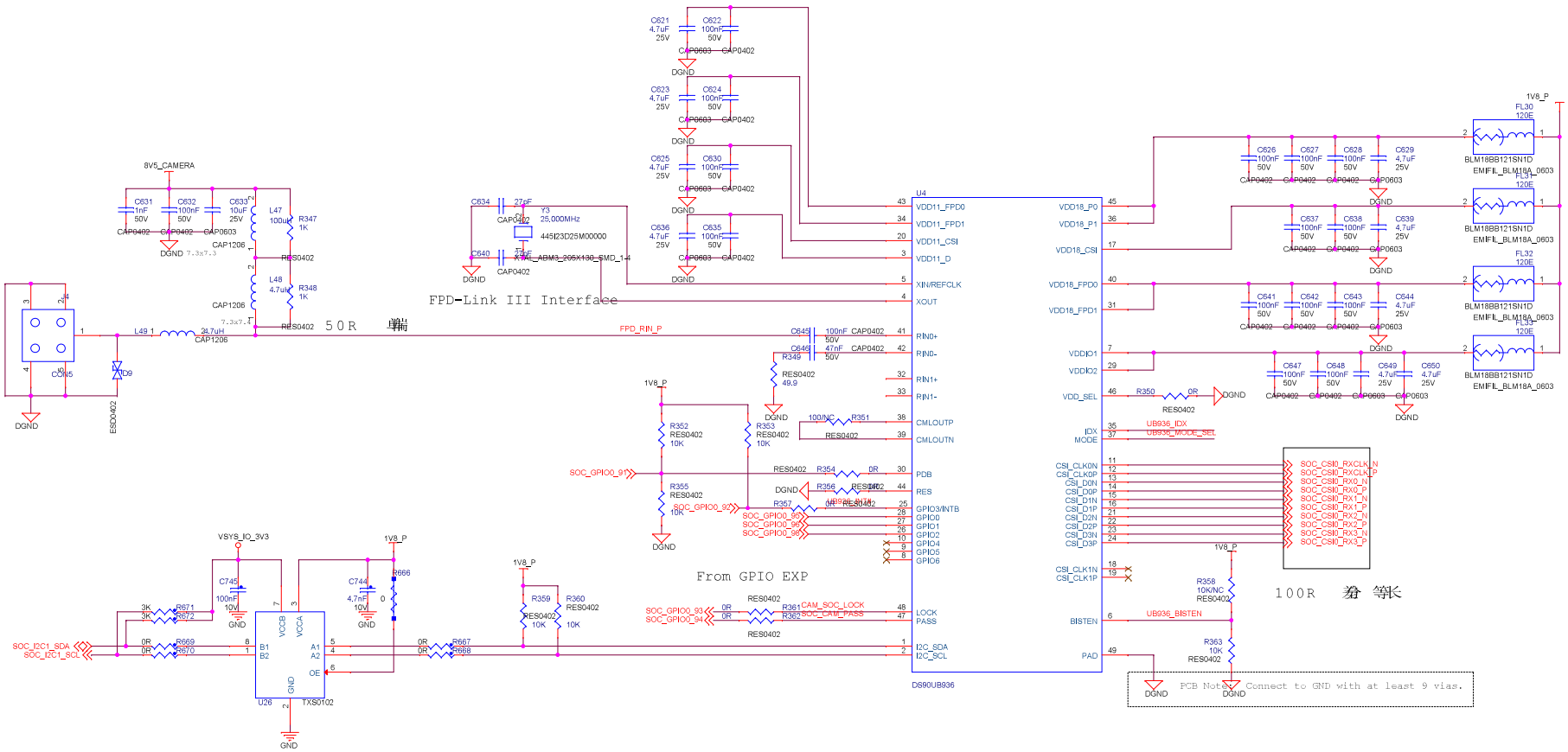

DEVICE ALIAS ID

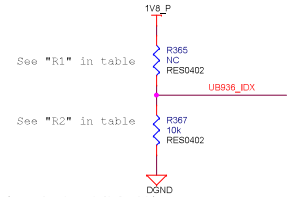

Set Primary I2C adress 0X60 for 8 bit format and 0X30 for 7 bit format

7b' I2C Address	R1	R2
0x2C	Open	40.2K
(other - see DM)		

MODE Selection

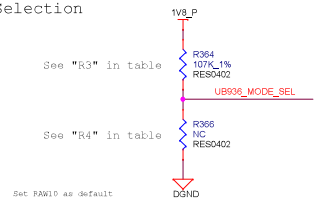

Set RAW10 as default

Selected Mode: 0 (Default)	Software Config Only
LFMODE (15 ? <85 MHz) REPEATER (OFF) BACK-COMPATIBLE (OFF) I2S-B OFF. 24B RGB	LFMODE (15 ? <85 MHz) REPEATER (OFF) BACK-COMPATIBLE (OFF) I2S-B ON. 18B RGB
R3 = <open> R4 = 40.2K, 1% (or any)	R3 = <open> R4 = 40.2K, 1% (or any)

Project : BJ EV Quick A	ZGYB	Title: FPD LINK-III DESERIALIZER
		Size: C; <Core Design>; Rev: E3
		Date: Monday, October 19, 2020; Sheet 32 of 40