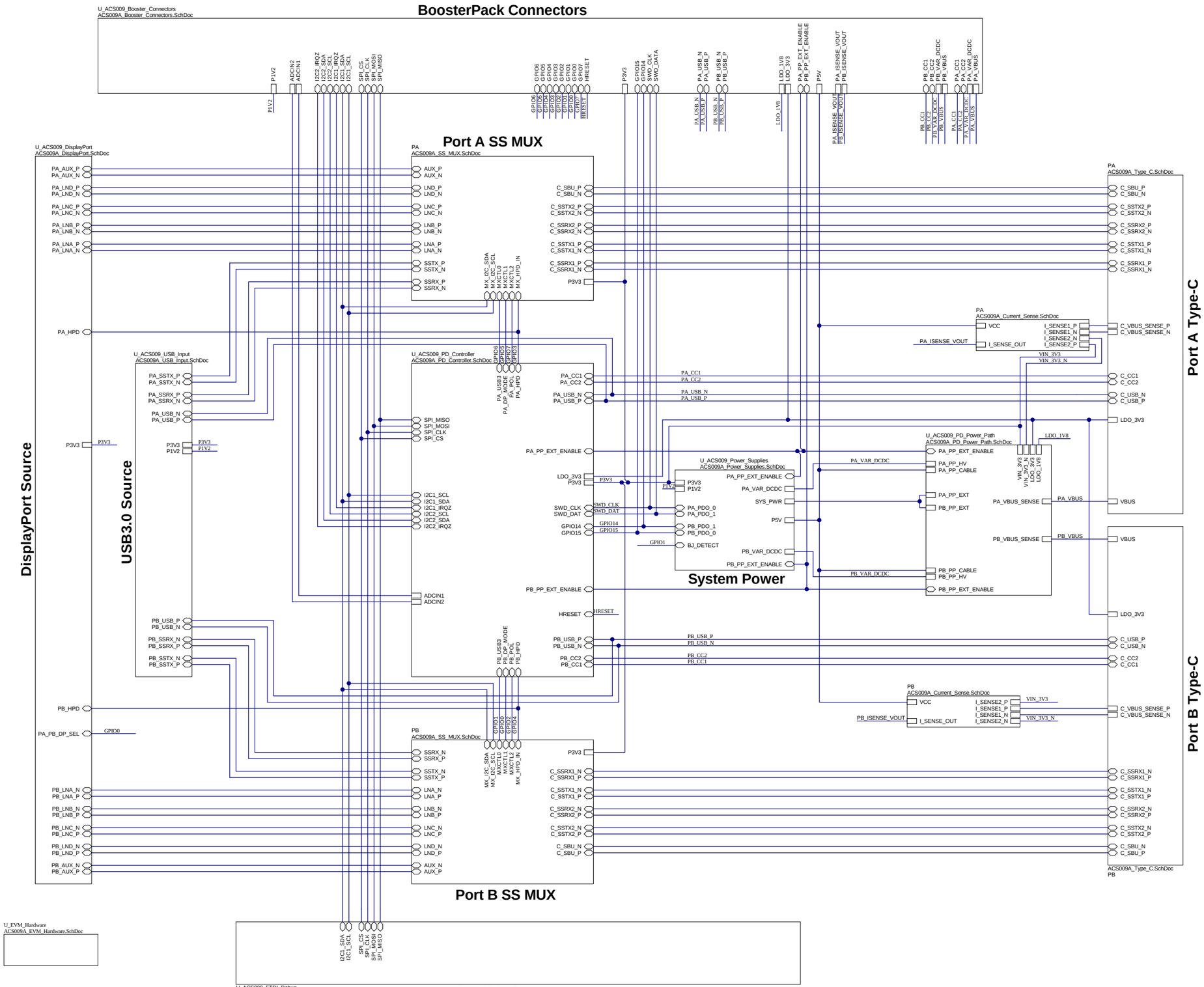

Orderable: TPS65988EVM		Designed for: Public Release	Mod. Date: 5/2/2018
TID #: N/A		Project Title: TPS65988EVM	
Number: ACS009	Rev: B	Sheet Title: TPS65988 EVM Block Diagram	
SVN Rev: Not in version control		Assembly Variant: 001	Sheet: 1 of 12
Drawn By: Jacob Ontiveros		File: ACS009A_Block_Diagram.SchDoc	Size: C
Engineer: Jacob Ontiveros		Contact: http://www.ti.com/support	

Texas Instruments

http://www.ti.com

Texas Instruments and/or its licensors do not warrant the accuracy or completeness of this specification or any information contained therein. Texas Instruments and/or its licensors do not warrant that this design will meet the specifications, will be suitable for your application or fit for any particular purpose, or will operate in an implementation. Texas Instruments and/or its licensors do not warrant that the design is production worthy. You should completely validate and test your design implementation to confirm the system functionality for your application.

© Texas Instruments 2017

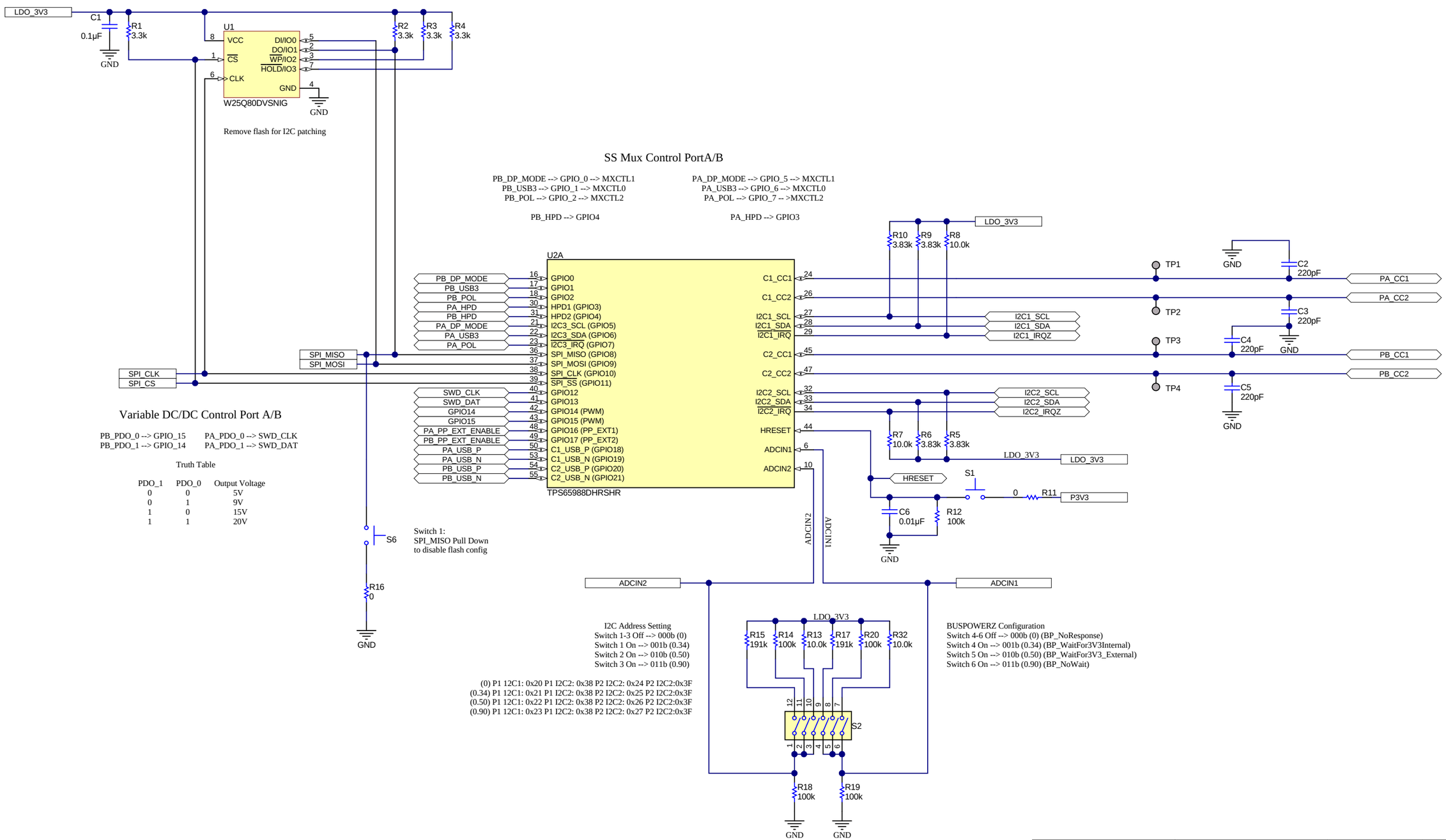

Texas Instruments and/or its licensors do not warrant the accuracy or completeness of this specification or any information contained therein. Texas Instruments and/or its licensors do not warrant that this design will meet the specifications, will be suitable for your application or fit for any particular purpose, or will operate in an implementation. Texas Instruments and/or its licensors do not warrant that the design is production worthy. You should completely validate and test your design implementation to confirm the system functionality for your application.

Orderable: TPS65988EVM	Designed for: Public Release	Mod. Date: 8/30/2019
TID #: N/A	Project Title: TPS65988EVM	
Number: ACS009 Rev: B	Sheet Title: TPS65988 PD Controller	
SVN Rev: Not in version control	Assembly Variant: 001	Sheet: 2 of 12
Drawn By: Jacob Ontiveros	File: ACS009A_PD_Controller.SchDoc	Size: B
Engineer: Jacob Ontiveros	Contact: http://www.ti.com/support	

Texas Instruments
http://www.ti.com

© Texas Instruments 2017

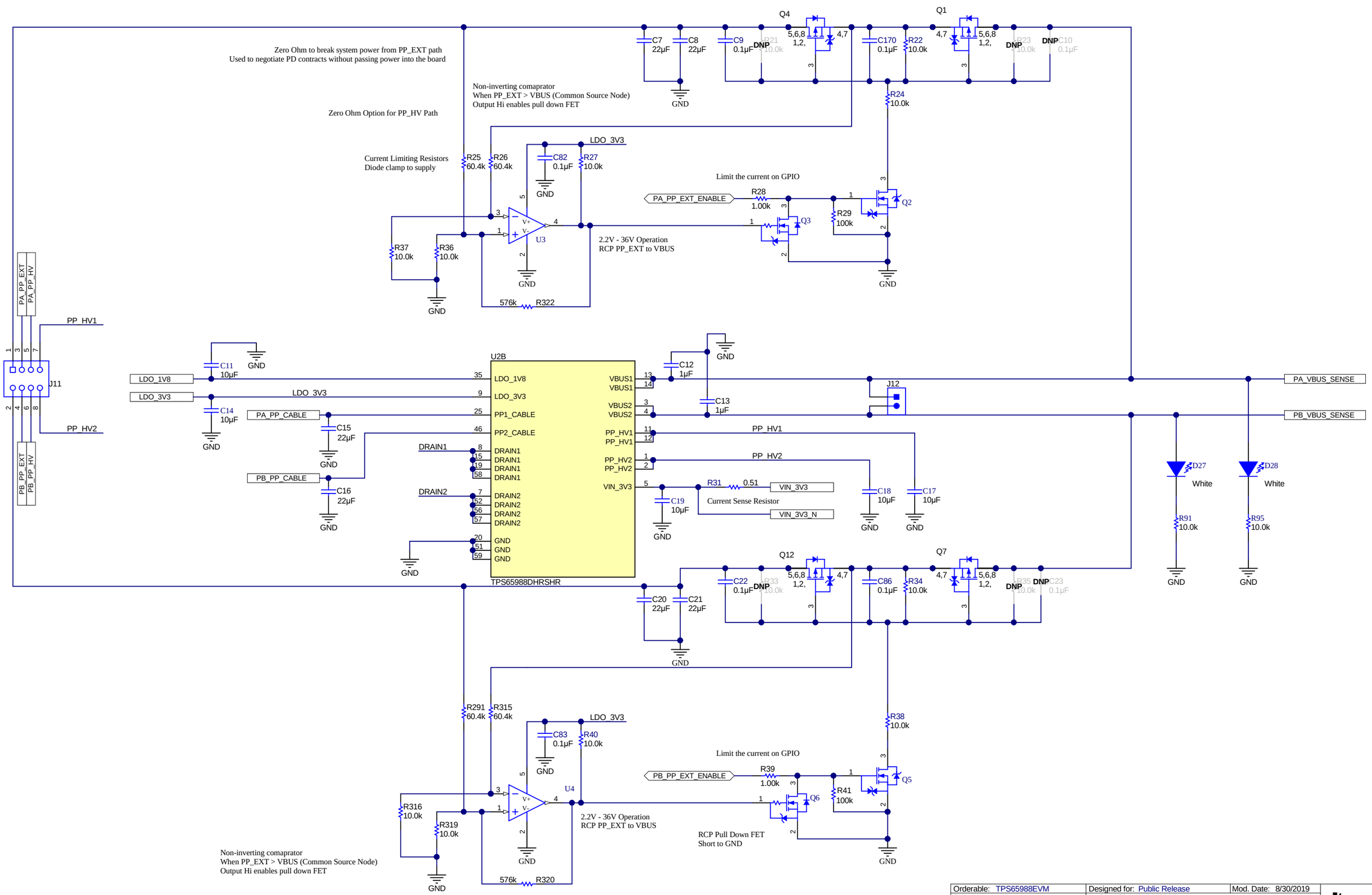

Texas Instruments and/or its licensors do not warrant the accuracy or completeness of this specification or any information contained therein. Texas Instruments and/or its licensors do not warrant that this design will meet the specifications, will be suitable for your application or fit for any particular purpose, or will operate in an implementation. Texas Instruments and/or its licensors do not warrant that the design is production worthy. You should completely validate and test your design implementation to confirm the system functionality for your application.

Orderable: TPS65988EVM		Designed for: Public Release	Mod. Date: 8/30/2019
TID #: N/A		Project Title: TPS65988EVM	
Number: ACS009	Rev: B	Sheet Title: TPS65988 PD Power Path	
SVN Rev: Not in version control		Assembly Variant: 001	Sheet: 3 of 12
Drawn By: Jacob Ontiveros		File: ACS009A_PD_Power_Path.SchDoc	Size: B
Engineer: Jacob Ontiveros		Contact: http://www.ti.com/support	

Texas Instruments
http://www.ti.com

© Texas Instruments 2017

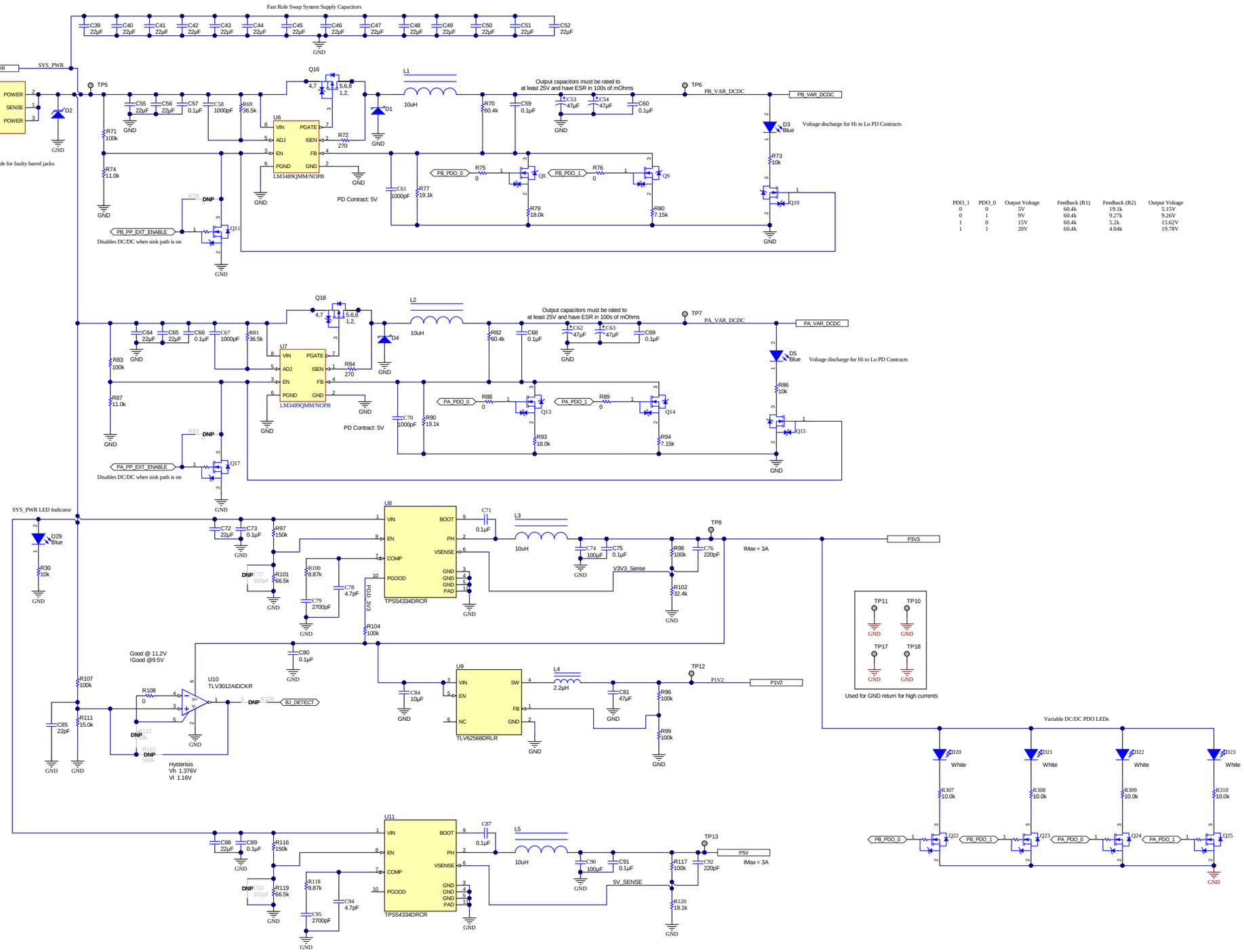

PDO_1	PDO_0	Output Voltage	Feedback (R1)	Feedback (R2)	Output Voltage
0	0	5V	60.4k	19.1k	5.15V
0	1	9V	60.4k	9.27k	9.26V
1	0	15V	60.4k	5.2k	15.62V
1	1	20V	60.4k	4.04k	19.78V

Texas Instruments and/or its licensors do not warrant the accuracy or completeness of this specification or any information contained therein. Texas Instruments and/or its licensors do not warrant that this design will meet the specifications, will be suitable for your application or fit for any particular purpose, or will operate in an implementation. Texas Instruments and/or its licensors do not warrant that the design is production worthy. You should completely validate and test your design implementation to confirm the system functionality for your application.

Orderable: TPS65988EVM		Designed for: Public Release	Mod. Date: 5/2/2018
TID #: N/A		Project Title: TPS65988EVM	
Number: ACS009	Rev: B	Sheet Title: System Power Supplies	
SVN Rev: Not in version control		Assembly Variant: 001	Sheet: 4 of 12
Drawn By: Jacob Ontiveros		File: ACS009A_Power_Supplies.SchDoc	Size: C
Engineer: Jacob Ontiveros		Contact: http://www.ti.com/support	

TEXAS INSTRUMENTS
http://www.ti.com

© Texas Instruments 2017

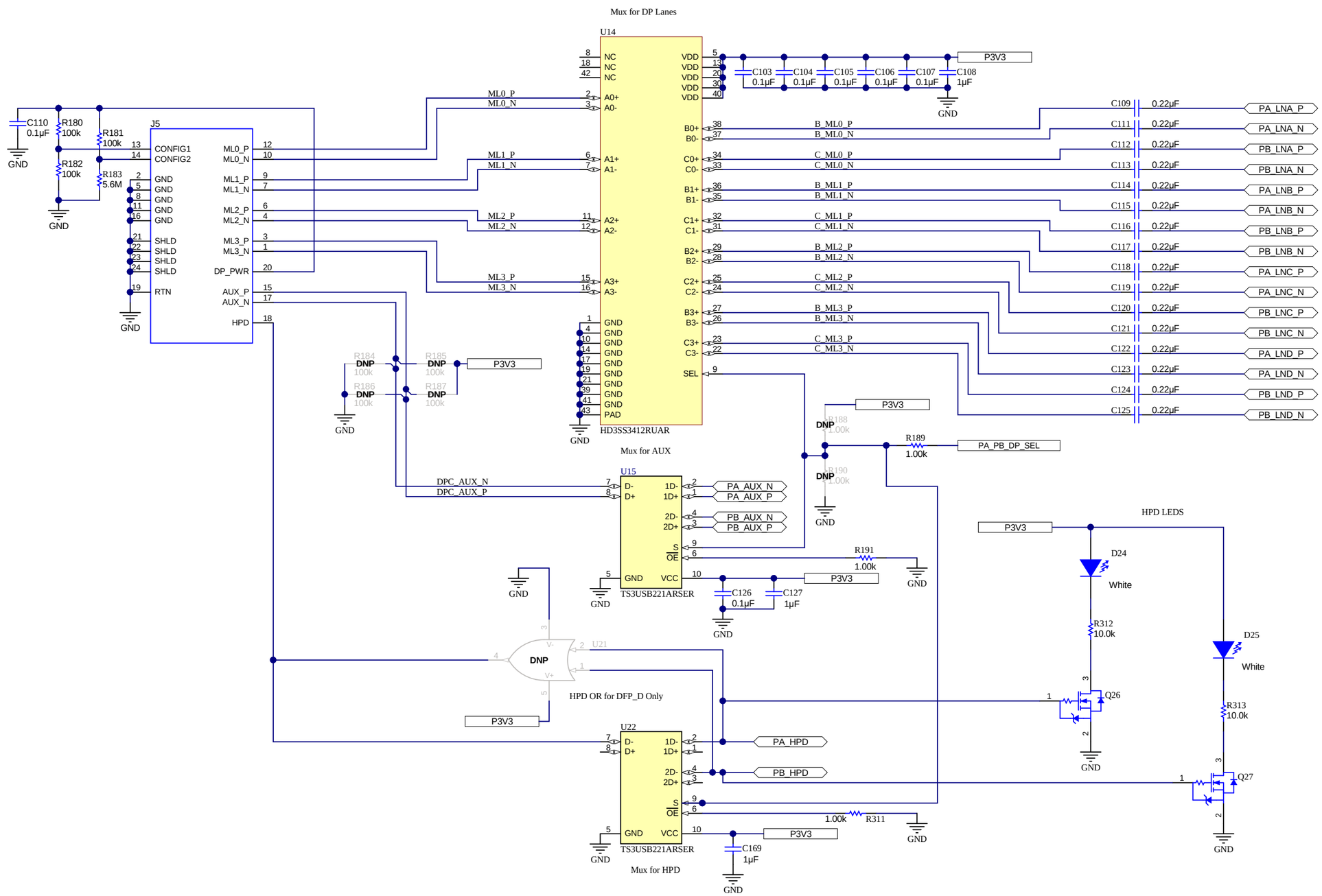

Orderable: TPS65988EVM	Designed for: Public Release	Mod. Date: 4/17/2018	
TID #: N/A	Project Title: TPS65988EVM		
Number: ACS009 Rev: B	Sheet Title: DP Source Mux & Connector		
SVN Rev: Not in version control	Assembly Variant: 001	Sheet: 5 of 12	
Drawn By: Jacob Ontiveros	File: ACS009A_DisplayPort.SchDoc	Size: B	
Engineer: Jacob Ontiveros	Contact: http://www.ti.com/support		

Texas Instruments and/or its licensors do not warrant the accuracy or completeness of this specification or any information contained therein. Texas Instruments and/or its licensors do not warrant that this design will meet the specifications, will be suitable for your application or fit for any particular purpose, or will operate in an implementation. Texas Instruments and/or its licensors do not warrant that the design is production worthy. You should completely validate and test your design implementation to confirm the system functionality for your application.

Texas Instruments
http://www.ti.com
© Texas Instruments 2017

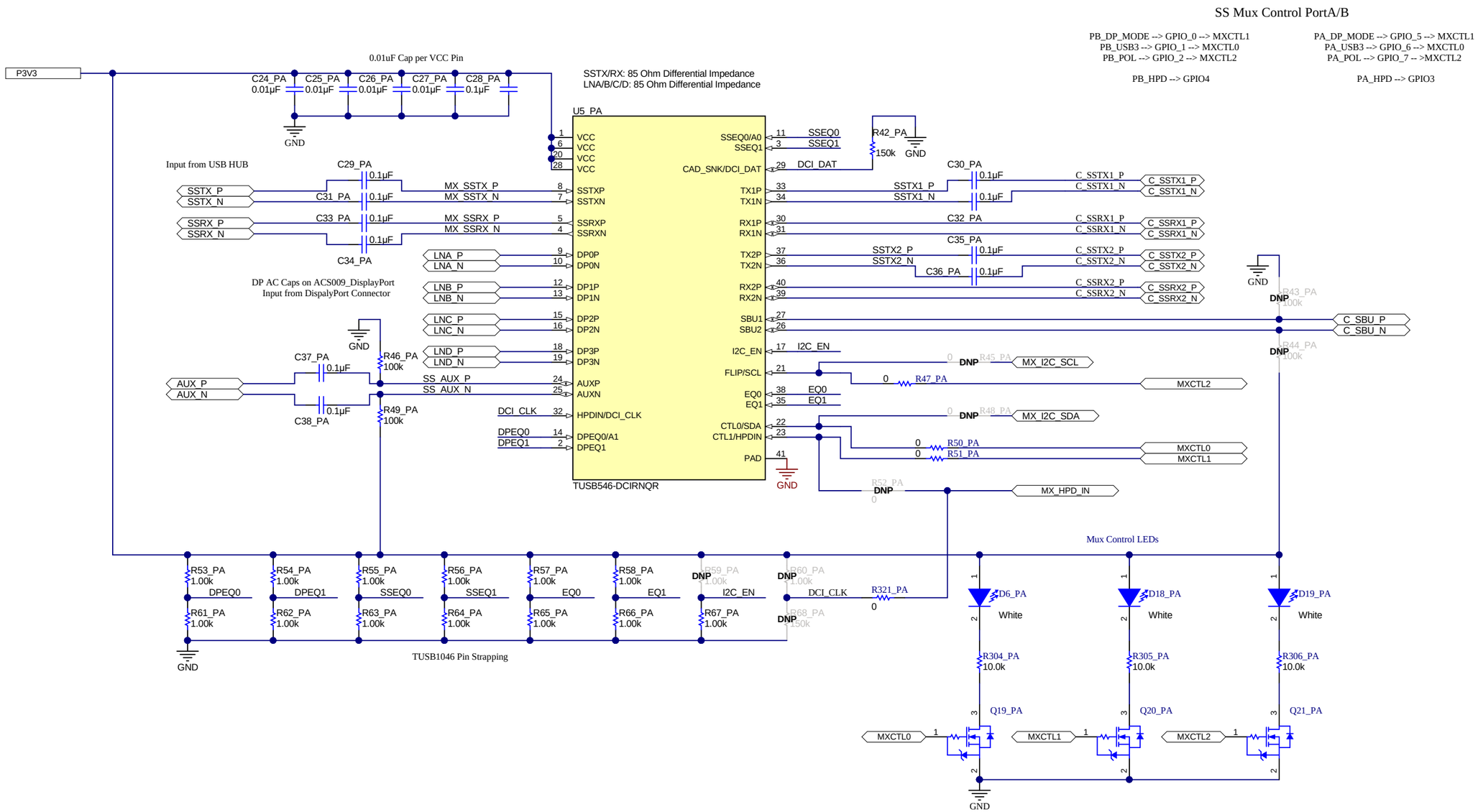

Texas Instruments and/or its licensors do not warrant the accuracy or completeness of this specification or any information contained therein. Texas Instruments and/or its licensors do not warrant that this design will meet the specifications, will be suitable for your application or fit for any particular purpose, or will operate in an implementation. Texas Instruments and/or its licensors do not warrant that the design is production worthy. You should completely validate and test your design implementation to confirm the system functionality for your application.

Orderable: TPS65988EVM		Designed for: Public Release	Mod. Date: 5/2/2018
TID #: N/A		Project Title: TPS65988EVM	
Number: ACS009	Rev: B	Sheet Title: Type-C SS Mux	
SVN Rev: Not in version control		Assembly Variant: 001	Sheet: 6 of 12
Drawn By: Jacob Ontiveros		File: ACS009A_SS_MUX.SchDoc	Size: B
Engineer: Jacob Ontiveros		Contact: http://www.ti.com/support	

Texas Instruments
http://www.ti.com

© Texas Instruments 2017

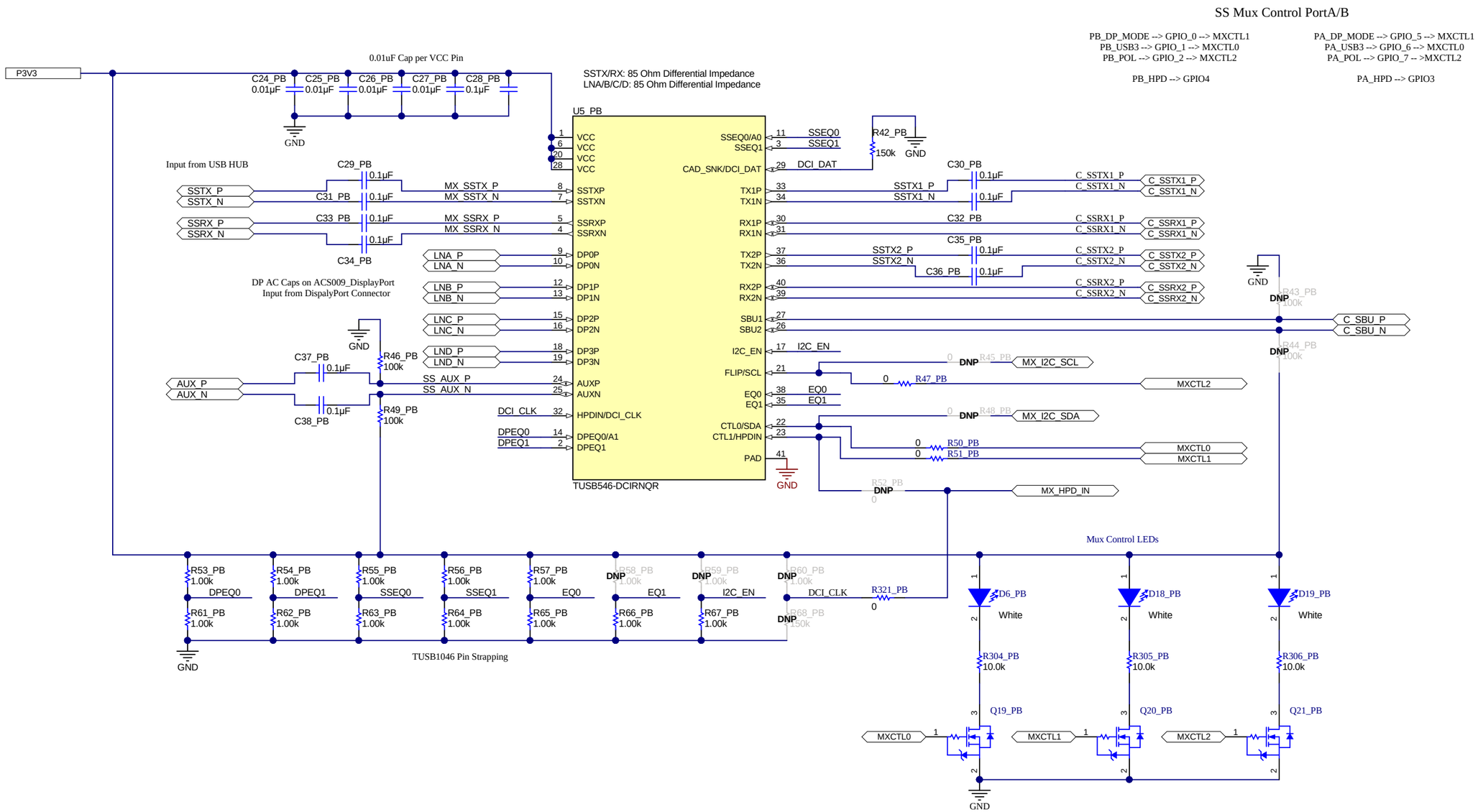

Texas Instruments and/or its licensors do not warrant the accuracy or completeness of this specification or any information contained therein. Texas Instruments and/or its licensors do not warrant that this design will meet the specifications, will be suitable for your application or fit for any particular purpose, or will operate in an implementation. Texas Instruments and/or its licensors do not warrant that the design is production worthy. You should completely validate and test your design implementation to confirm the system functionality for your application.

Orderable: TPS65988EVM		Designed for: Public Release	Mod. Date: 5/2/2018
TID #: N/A		Project Title: TPS65988EVM	
Number: ACS009	Rev: B	Sheet Title: Type-C SS Mux	
SVN Rev: Not in version control		Assembly Variant: 001	Sheet: 6 of 12
Drawn By: Jacob Ontiveros		File: ACS009A_SS_MUX.SchDoc	Size: B
Engineer: Jacob Ontiveros		Contact: http://www.ti.com/support	

Texas Instruments
http://www.ti.com

© Texas Instruments 2017

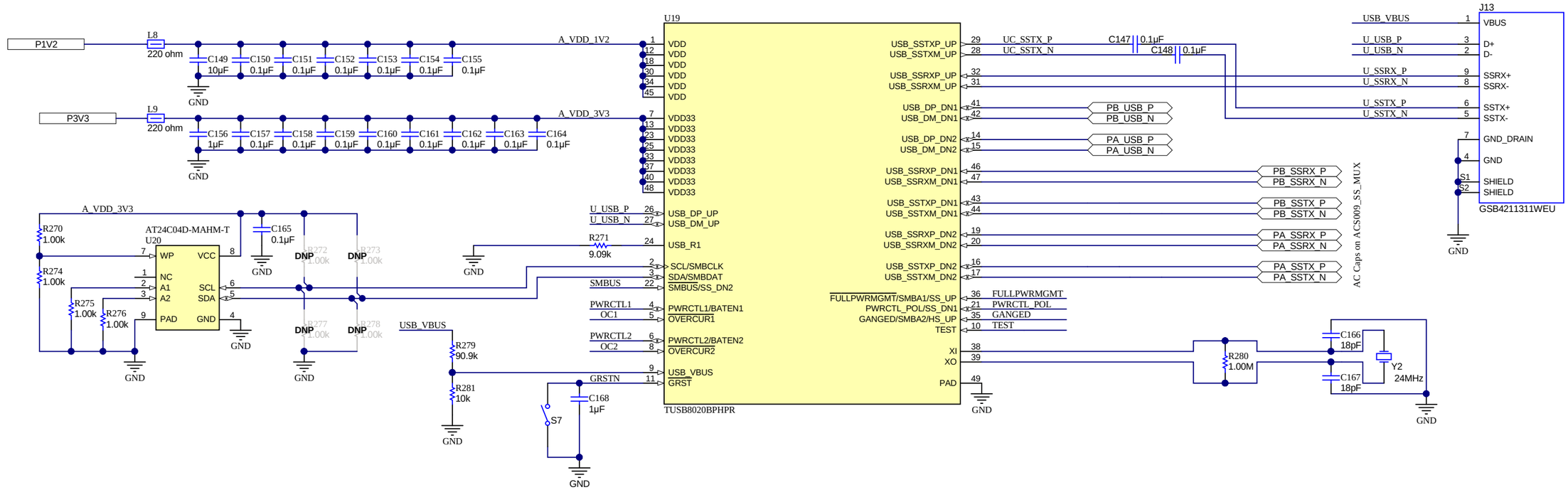

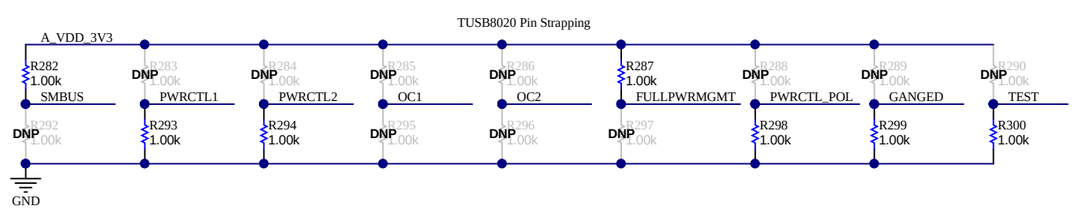

Texas Instruments and/or its licensors do not warrant the accuracy or completeness of this specification or any information contained therein. Texas Instruments and/or its licensors do not warrant that this design will meet the specifications, will be suitable for your application or fit for any particular purpose, or will operate in an implementation. Texas Instruments and/or its licensors do not warrant that the design is production worthy. You should completely validate and test your design implementation to confirm the system functionality for your application.

Orderable: TPS65988EVM	Designed for: Public Release	Mod. Date: 5/2/2018
TID #: N/A	Project Title: TPS65988EVM	
Number: ACS009 Rev: B	Sheet Title: USB3 Hub & Type-B Connector	
SVN Rev: Not in version control	Assembly Variant: 001	Sheet: 7 of 12
Drawn By: Jacob Ontiveros	File: ACS009A_USB_Input.SchDoc	Size: B
Engineer: Jacob Ontiveros	Contact: http://www.ti.com/support	

Texas Instruments
http://www.ti.com
© Texas Instruments 2017

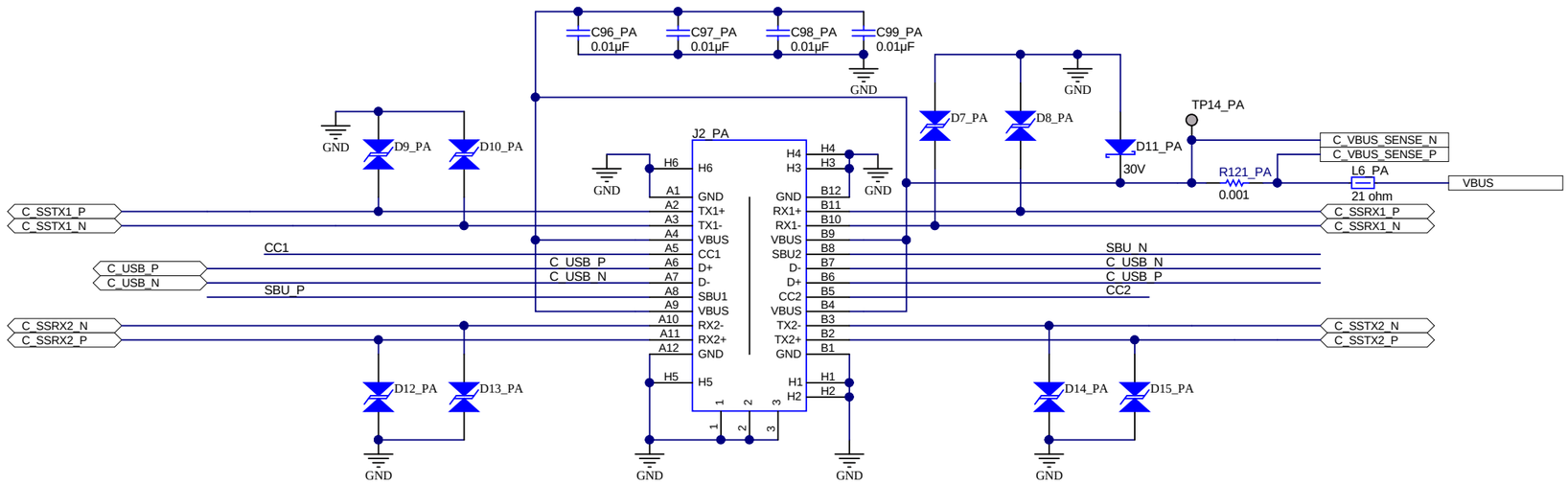

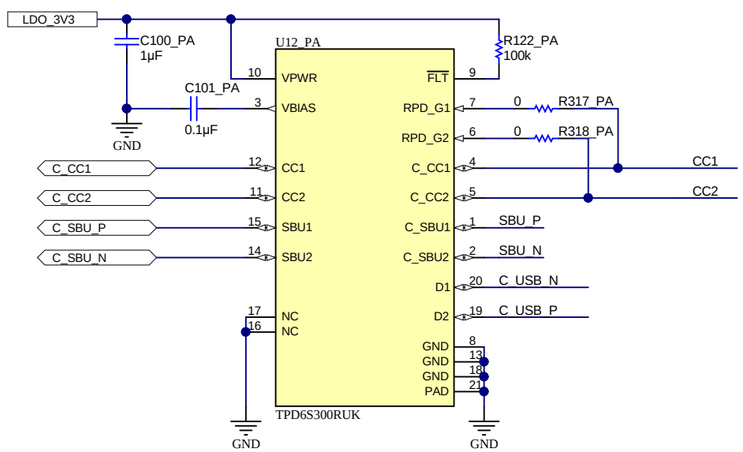

Orderable: TPS65988EVM		Designed for: Public Release	Mod. Date: 5/2/2018
TID #: N/A		Project Title: TPS65988EVM	
Number: ACS009	Rev: B	Sheet Title: Type-C Connector & Protection	
SVN Rev: Not in version control		Assembly Variant: 001	Sheet: 8 of 12
Drawn By: Jacob Ontiveros		File: ACS009A_Type_C.SchDoc	Size: B
Engineer: Jacob Ontiveros		Contact: http://www.ti.com/support	

Texas Instruments and/or its licensors do not warrant the accuracy or completeness of this specification or any information contained therein. Texas Instruments and/or its licensors do not warrant that this design will meet the specifications, will be suitable for your application or fit for any particular purpose, or will operate in an implementation. Texas Instruments and/or its licensors do not warrant that the design is production worthy. You should completely validate and test your design implementation to confirm the system functionality for your application.

Texas Instruments
http://www.ti.com
© Texas Instruments 2017

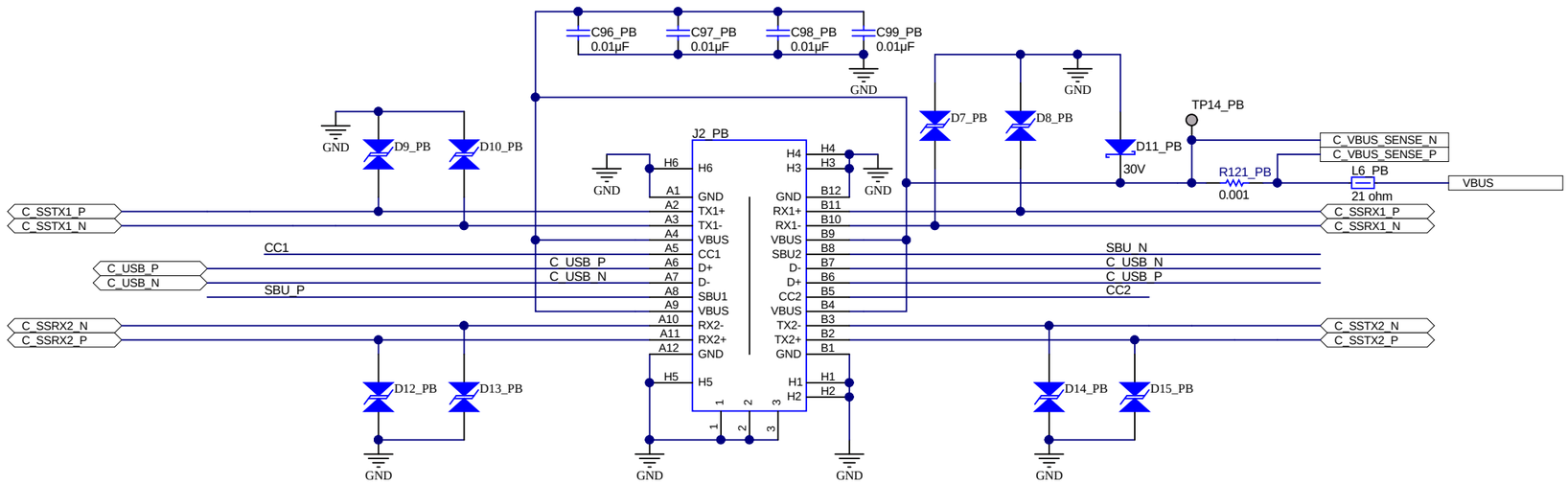

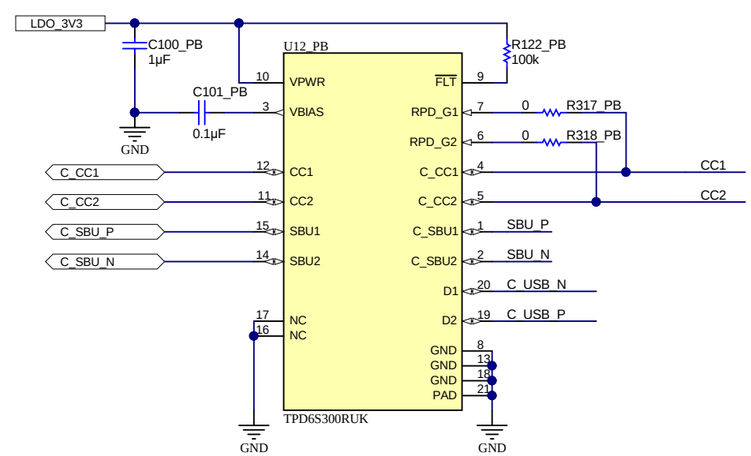

Orderable: TPS65988EVM		Designed for: Public Release	Mod. Date: 5/2/2018
TID #: N/A		Project Title: TPS65988EVM	
Number: ACS009	Rev: B	Sheet Title: Type-C Connector & Protection	
SVN Rev: Not in version control		Assembly Variant: 001	Sheet: 8 of 12
Drawn By: Jacob Ontiveros		File: ACS009A_Type_C.SchDoc	Size: B
Engineer: Jacob Ontiveros		Contact: http://www.ti.com/support	

Texas Instruments and/or its licensors do not warrant the accuracy or completeness of this specification or any information contained therein. Texas Instruments and/or its licensors do not warrant that this design will meet the specifications, will be suitable for your application or fit for any particular purpose, or will operate in an implementation. Texas Instruments and/or its licensors do not warrant that the design is production worthy. You should completely validate and test your design implementation to confirm the system functionality for your application.

Texas Instruments
http://www.ti.com
© Texas Instruments 2017

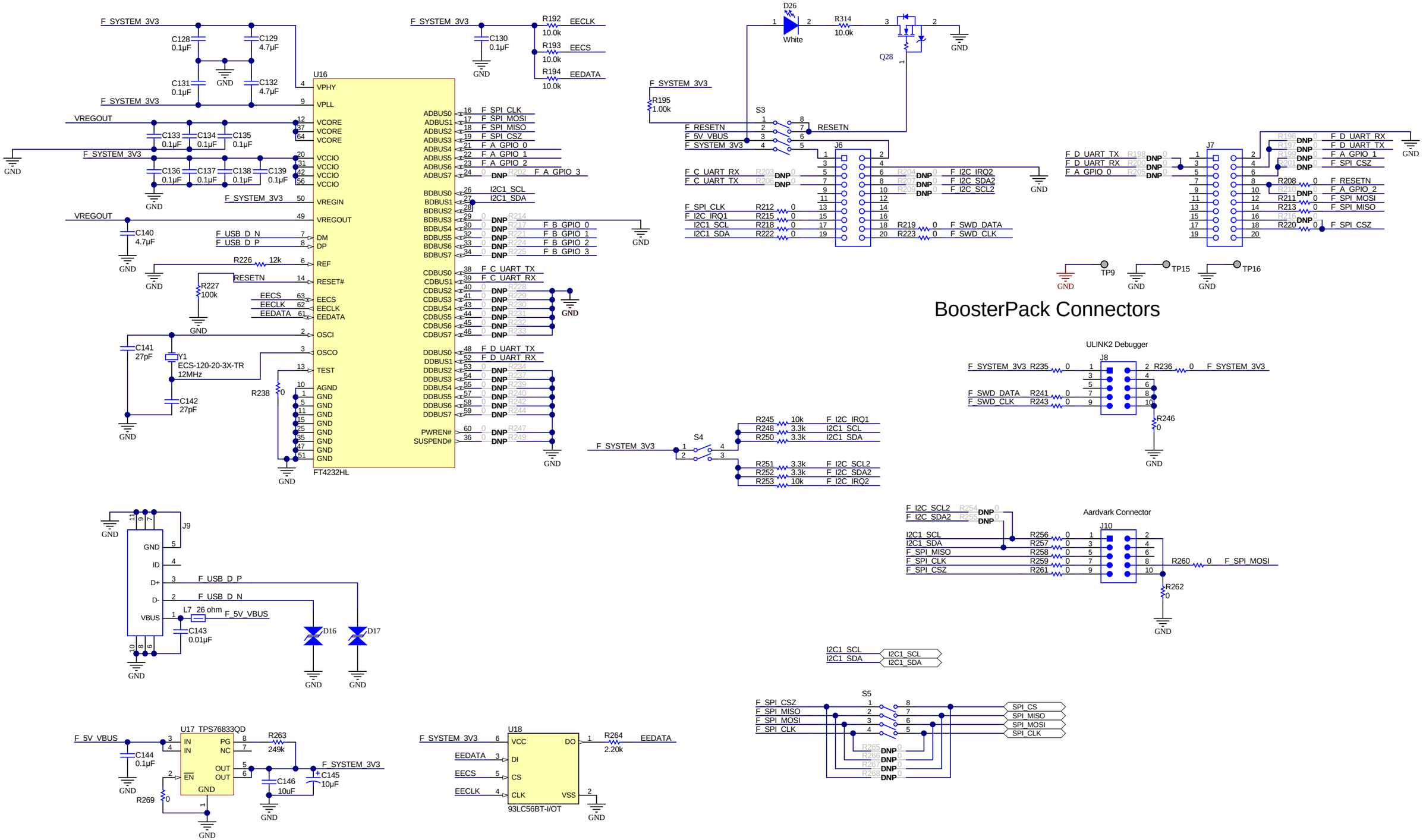

Texas Instruments and/or its licensors do not warrant the accuracy or completeness of this specification or any information contained therein. Texas Instruments and/or its licensors do not warrant that this design will meet the specifications, will be suitable for your application or fit for any particular purpose, or will operate in an implementation. Texas Instruments and/or its licensors do not warrant that the design is production worthy. You should completely validate and test your design implementation to confirm the system functionality for your application.

Orderable: TPS65988EVM		Designed for: Public Release	Mod. Date: 5/2/2018
TID #: N/A		Project Title: TPS65988EVM	
Number: ACS009	Rev: B	Sheet Title: FTDI Debug Board	
SVN Rev: Not in version control		Assembly Variant: 001	Sheet: 9 of 12
Drawn By: Jacob Ontiveros		File: ACS009A_FTDI_Debug.SchDoc	Size: B
Engineer: Jacob Ontiveros		Contact: http://www.ti.com/support	

Texas Instruments
http://www.ti.com

© Texas Instruments 2017

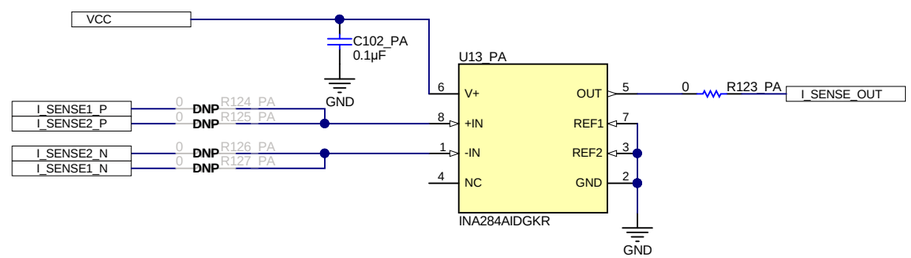

Texas Instruments and/or its licensors do not warrant the accuracy or completeness of this specification or any information contained therein. Texas Instruments and/or its licensors do not warrant that this design will meet the specifications, will be suitable for your application or fit for any particular purpose, or will operate in an implementation. Texas Instruments and/or its licensors do not warrant that the design is production worthy. You should completely validate and test your design implementation to confirm the system functionality for your application.

Orderable: TPS65988EVM		Designed for: Public Release	Mod. Date: 5/2/2018
TID #: N/A		Project Title: TPS65988EVM	
Number: ACS009	Rev: B	Sheet Title: Current Sense	
SVN Rev: Not in version control		Assembly Variant: 001	Sheet: 10 of 12
Drawn By: Jacob Ontiveros		File: ACS009A_Current_Sense.SchDoc	Size: B
Engineer: Jacob Ontiveros		Contact: http://www.ti.com/support	

Texas Instruments
http://www.ti.com

© Texas Instruments 2017

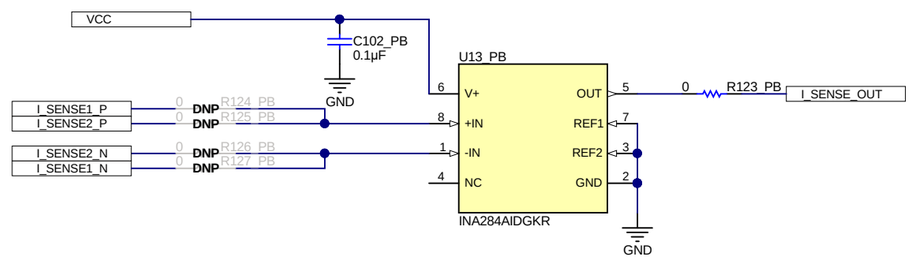

Texas Instruments and/or its licensors do not warrant the accuracy or completeness of this specification or any information contained therein. Texas Instruments and/or its licensors do not warrant that this design will meet the specifications, will be suitable for your application or fit for any particular purpose, or will operate in an implementation. Texas Instruments and/or its licensors do not warrant that the design is production worthy. You should completely validate and test your design implementation to confirm the system functionality for your application.

Orderable: TPS65988EVM		Designed for: Public Release	Mod. Date: 5/2/2018
TID #: N/A		Project Title: TPS65988EVM	
Number: ACS009	Rev: B	Sheet Title: Current Sense	
SVN Rev: Not in version control		Assembly Variant: 001	Sheet: 10 of 12
Drawn By: Jacob Ontiveros		File: ACS009A_Current_Sense.SchDoc	Size: B
Engineer: Jacob Ontiveros		Contact: http://www.ti.com/support	

Texas Instruments
http://www.ti.com

© Texas Instruments 2017

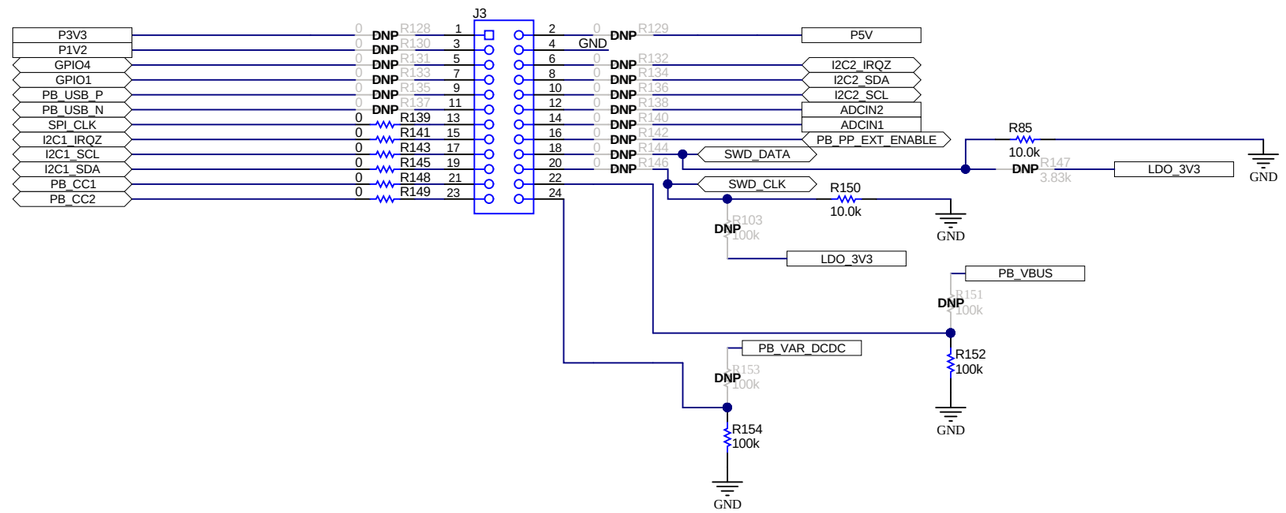

High Current Capable

P5V
PA_VBUS
PA_VAR_DCDC
PB_VBUS
PB_VAR_DCDC

R151/153/177/178
Replace w/ zero Ohm or short

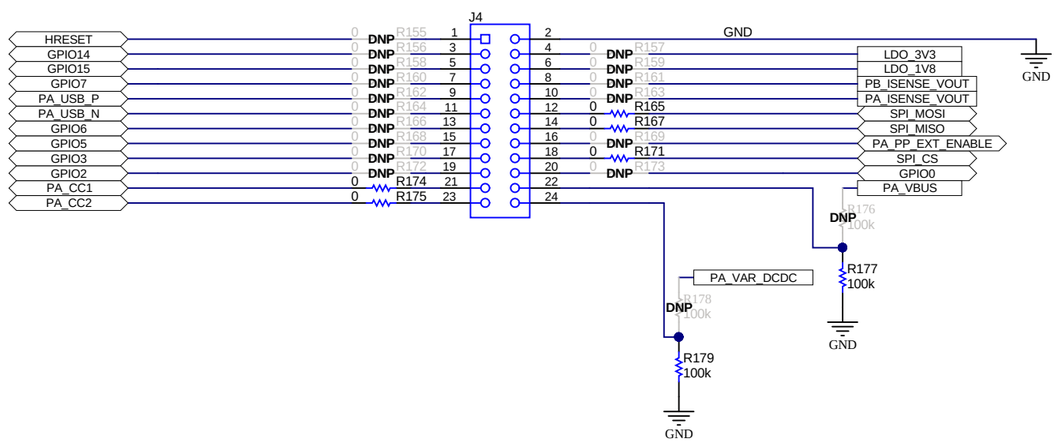

Texas Instruments and/or its licensors do not warrant the accuracy or completeness of this specification or any information contained therein. Texas Instruments and/or its licensors do not warrant that this design will meet the specifications, will be suitable for your application or fit for any particular purpose, or will operate in an implementation. Texas Instruments and/or its licensors do not warrant that the design is production worthy. You should completely validate and test your design implementation to confirm the system functionality for your application.

Orderable: TPS65988EVM	Designed for: Public Release	Mod. Date: 4/17/2018	
TID #: N/A	Project Title: TPS65988EVM		
Number: ACS009 Rev: B	Sheet Title: Debug Headers		
SVN Rev: Not in version control	Assembly Variant: 001	Sheet: 11 of 12	
Drawn By: Jacob Ontiveros	File: ACS009A_Booster_Connectors.SchDoc	Size: B	
Engineer: Jacob Ontiveros	Contact: http://www.ti.com/support		

Texas Instruments
http://www.ti.com
© Texas Instruments 2017

DNP FID1 DNP FID2 DNP FID3

DNP FID4 DNP FID5 DNP FID6

SH-J1 SH-J2 SH-J3 SH-J4

PCB LOGO
ESD Susceptible

PCB LOGO
WEEE logo

PCB LOGO
Texas Instruments

PCB LOGO
FCC disclaimer

CE Mark

PCB Number: ACS009
PCB Rev: A

ZZ2
Assembly Note
These assemblies are ESD sensitive, ESD precautions shall be observed.

ZZ3
Assembly Note
These assemblies must be clean and free from flux and all contaminants. Use of no clean flux is not acceptable.

ZZ4
Assembly Note
These assemblies must comply with workmanship standards IPC-A-610 Class 2, unless otherwise specified.

Texas Instruments and/or its licensors do not warrant the accuracy or completeness of this specification or any information contained therein. Texas Instruments and/or its licensors do not warrant that this design will meet the specifications, will be suitable for your application or fit for any particular purpose, or will operate in an implementation. Texas Instruments and/or its licensors do not warrant that the design is production worthy. You should completely validate and test your design implementation to confirm the system functionality for your application.

Orderable: TPS65988EVM		Designed for: Public Release	Mod. Date: 4/17/2018
TID #: N/A		Project Title: TPS65988EVM	
Number: ACS009	Rev: B	Sheet Title: EVM Hardware	
SVN Rev: Not in version control		Assembly Variant: 001	Sheet: 12 of 12
Drawn By: Jacob Ontiveros		File: ACS009A_EVM_Hardware.SchDoc	Size: B
Engineer: Jacob Ontiveros		Contact: http://www.ti.com/support	

Texas Instruments
http://www.ti.com
© Texas Instruments 2017