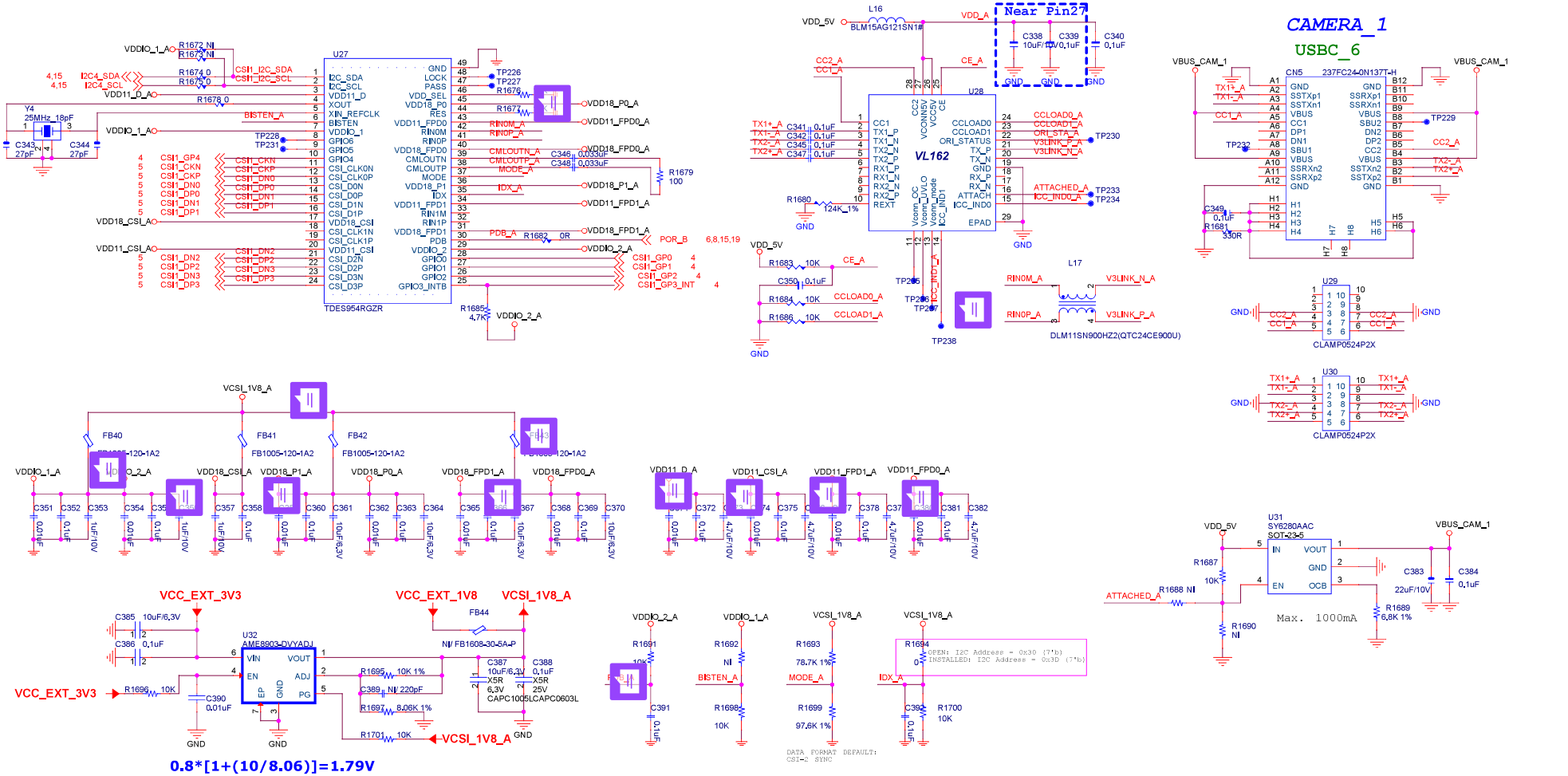
CAMERA_1
USBC_6
U27
TDES954RGZR
U28
VL162
U29
CLAMP0524P2X
U30
CLAMP0524P2X
U31
SY6280AAC
SOT-23-5
Max. 1000mA
U32
AME8903-DVYADJ
VCC_EXT_3V3
VCC_EXT_1V8
VCSI_1V8_A
0.8*[1+(10/8.06)]=1.79V
Near Pin27