	C3458	C3462	R3410	Reference waveform.
Before modification	No mount.	No mount.	0Ω resistor.	①
After modification	4700pF capacitor.	0.01uF capacitor.	0Ω resistor.	②

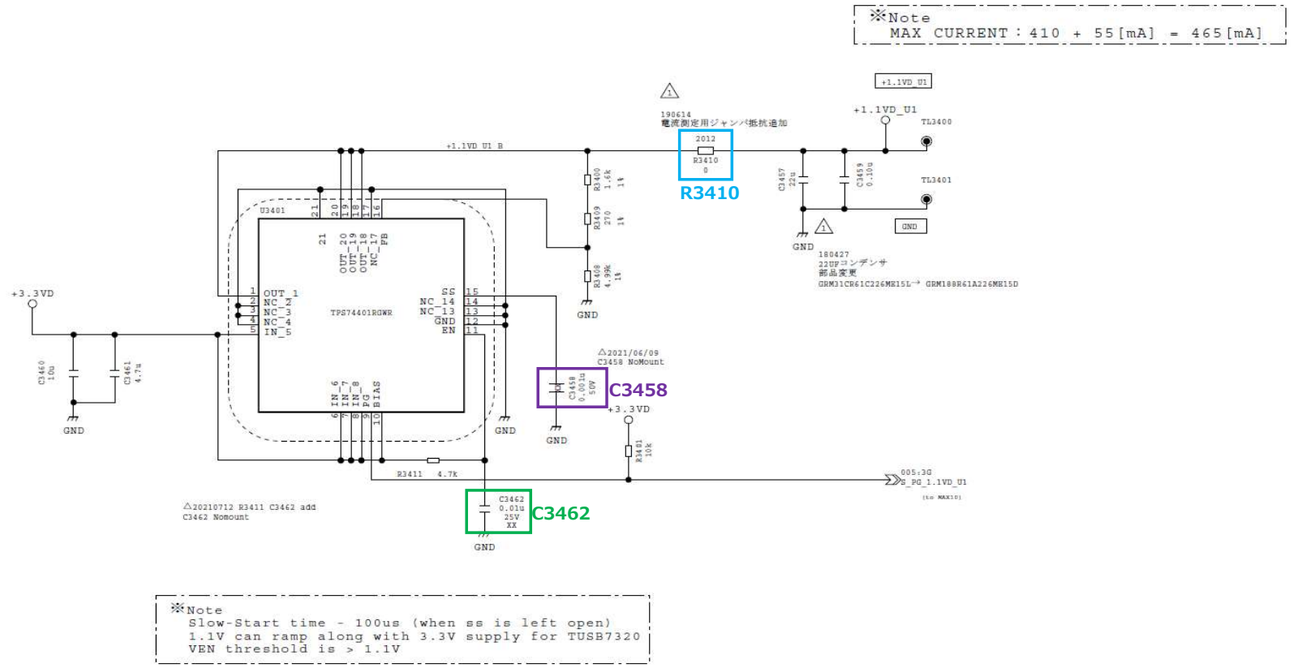

Ch1 : +3.3VD	Power supply input to VDD33 pin of TUSB7320.
CH2 : +1.1VD	Power supply input to VDD11 pin of TUSB7320.

①

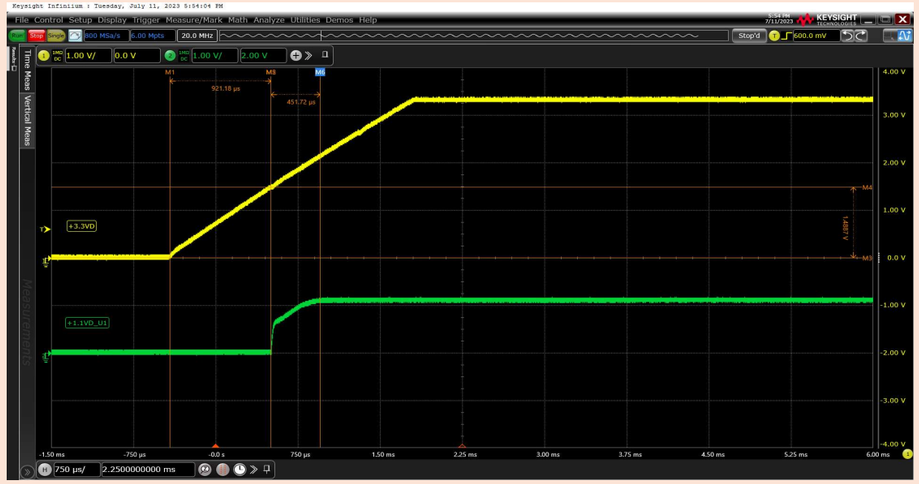
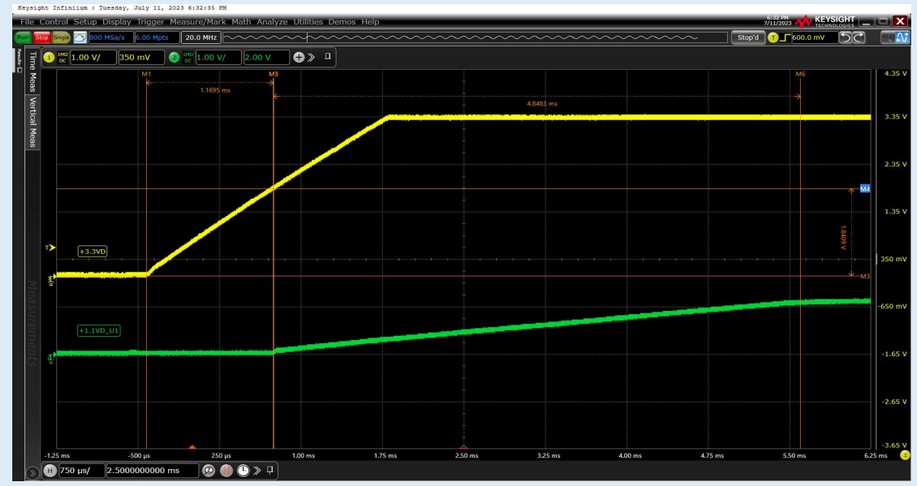
②