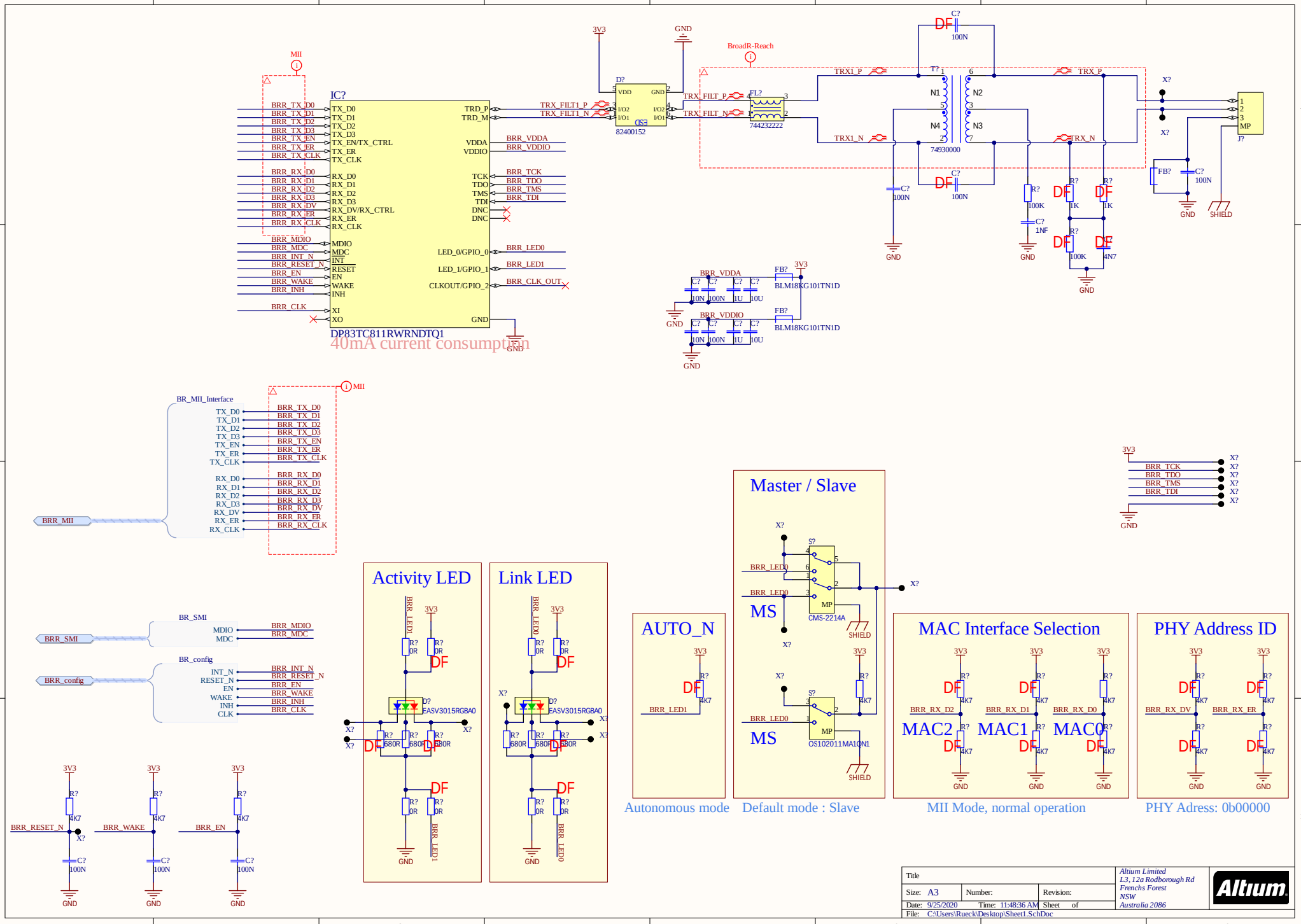
IC?
DP83TC811RWRNDTQ1
40mA current consumption
MII
BroadR-Reach
82400152
744232222
74930000
BR_MII_Interface
BR_SMI
BR_config
Activity LED
Link LED
Master / Slave
CMS-2214A
OS102011MA1QN1
AUTO_N
MAC Interface Selection
PHY Address ID
Autonomous mode
Default mode : Slave
MII Mode, normal operation
PHY Adress: 0b00000
Title
Size: A3
Number:
Revision:
Date: 9/25/2020
Time: 11:48:36 AM
Sheet of
File: C:\Users\Rueck\Desktop\Sheet1.SchDoc
Altium Limited
L3, 12a Rodborough Rd
Frenchs Forest
NSW
Australia 2086
Altium