TypeC Port_C0 Input

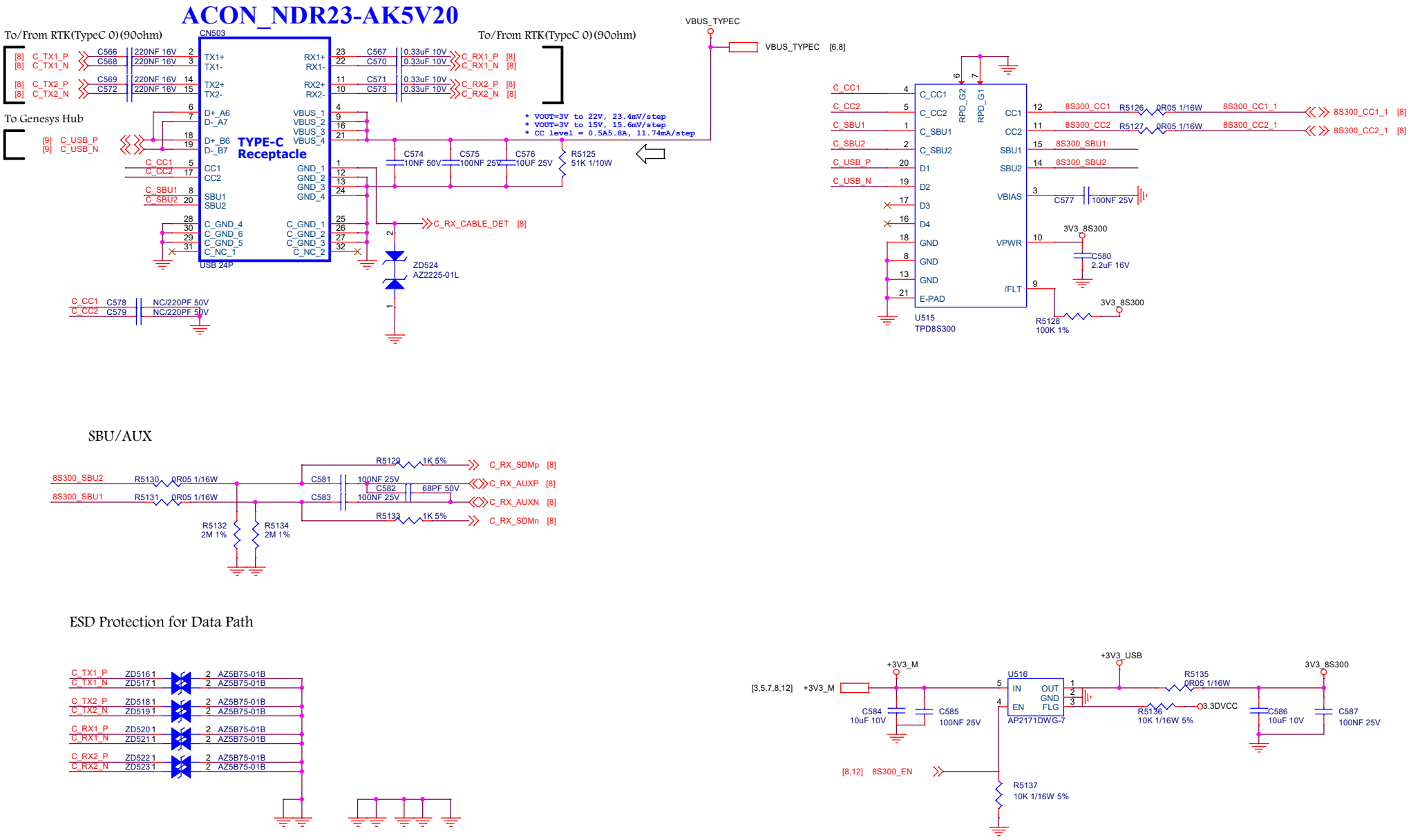

TPV (Top Victory Electronics Co., Ltd.)		OEM MODEL	HP Rose	Size	A3
線路圖編號	715GXXXX-M0X-000-0H50	TPV MODEL	XXX	Rev	A
Key Component	10. Audio & Webcam	PCB NAME	715GXXXX-M0X-000-0H50	備註	<備註>
Date	Wednesday, January 13, 2021	Sheet	11 of 12		