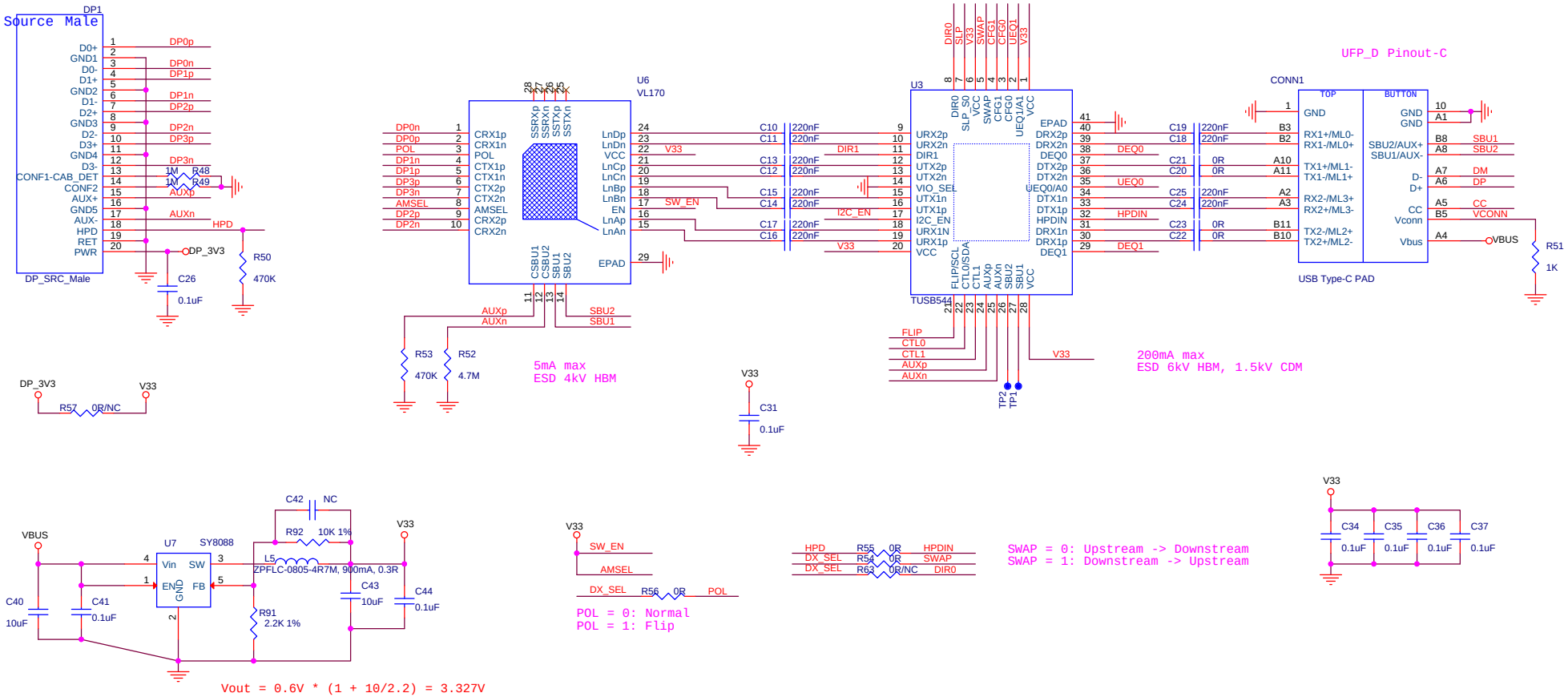

1. Disable RX detect (USB Function)
2. GPIO Configure Mode

DIR1/DIR0/CTL1/CTL0/FLIP = L/L/H/L/L
4 Lane DP - No Flip (Source side: DP on Upstream side)

DIR1/DIR0/CTL1/CTL0/FLIP = L/H/H/L/L
4 Lane DP - No Flip (Sink side: DP on Downstream side)

4. Upstream EQ = 3dB@4.05G
5. Downstream EQ = 12dB@4.05G
6. Upstream = 0dB, Downstream = 1dB, VOD=900mVpp

Title <Title>		
Size A3	Document Number <Doc>	Rev <RevCode>
Date: Monday, November 13, 2017	Sheet 3 of 3	