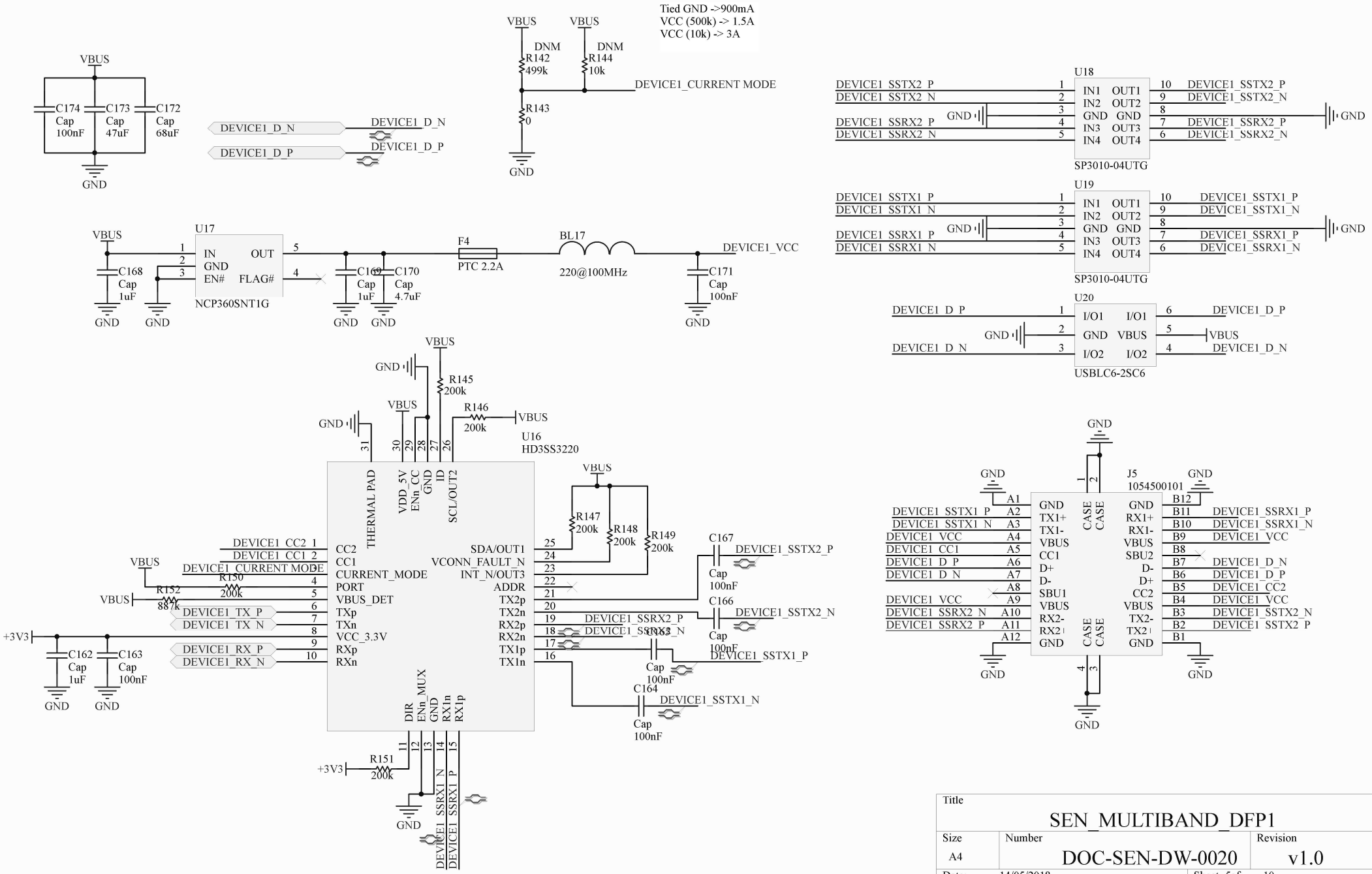

Title		
SEN_MULTIBAND_DFP1		
Size: A4	Number: DOC-SEN-DW-0020	Revision: v1.0
Date: 14/05/2018	Sheet 5of 10	
File: C:\Users\..\USBC_DFP1_IF.SchDoc	Drawn By: JJ. Frutos	