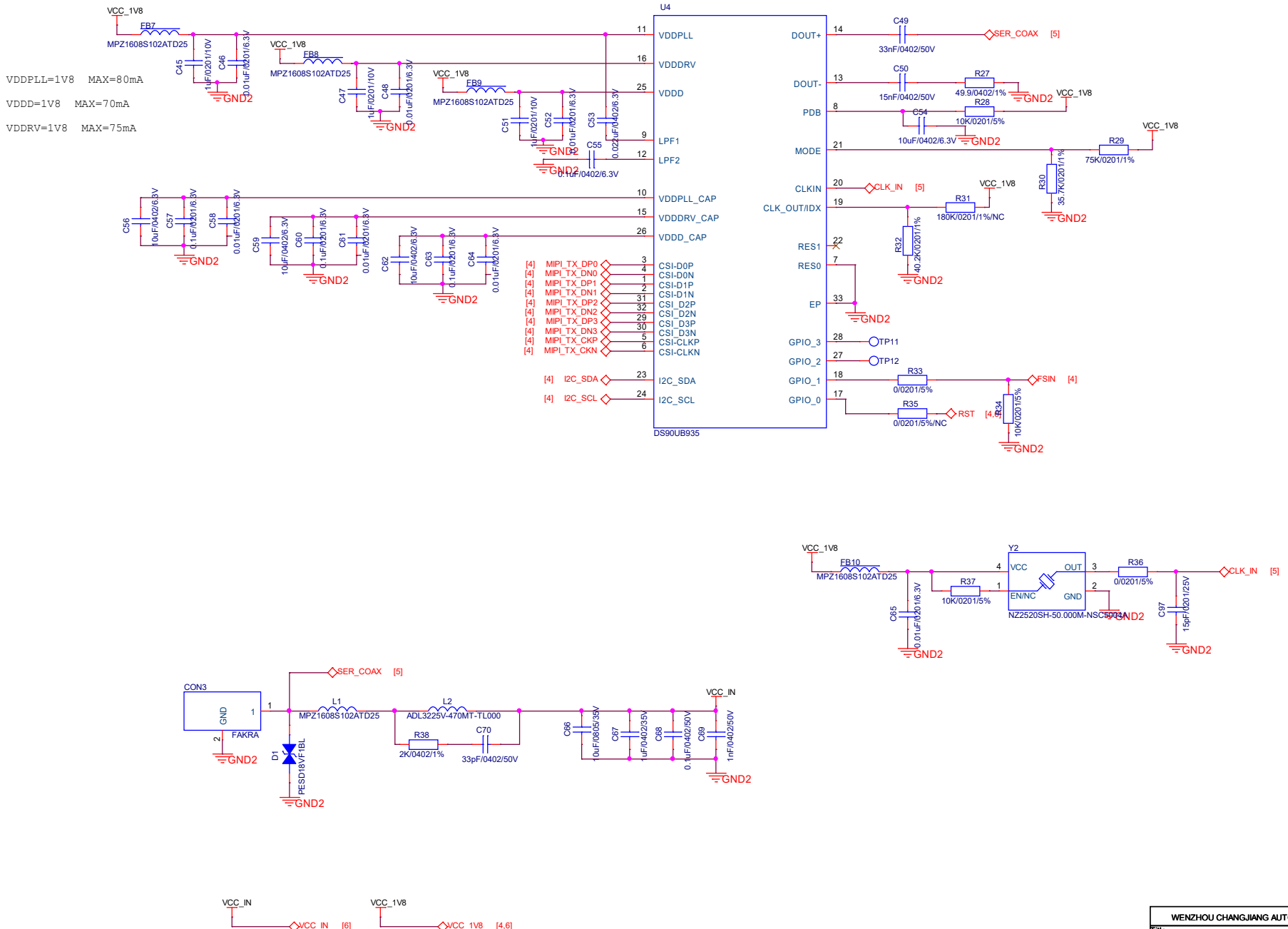


| | |
|---|---|
| WENZHOU CHANGJIANG AUTOMOBILE ELECTRONIC SYSTEM CO.,LTD | |
| Title | DMS_CAMERA |
| Size A3 | Document Number / Rev A |
| Date: Friday, July 22, 2022 | Sheet 5 of 7 |