WiFi/BT MODULE & ETHERNET PHY

WiFi/BT Module

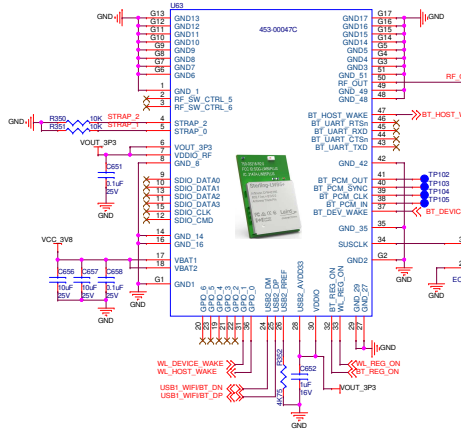

Antenna Connector

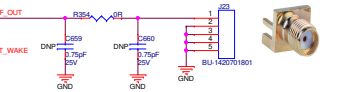

USB Selection Switch

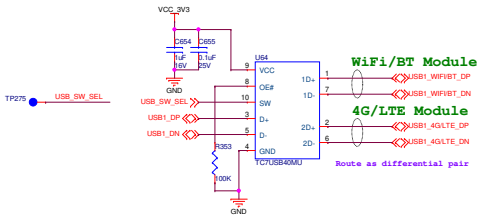

Ethernet PHY

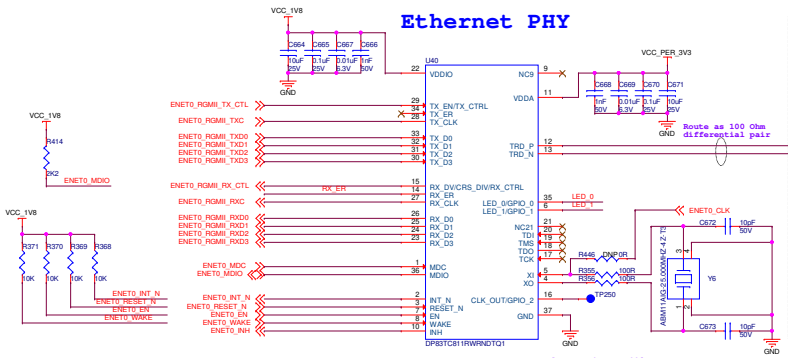

Ethernet Input Filter

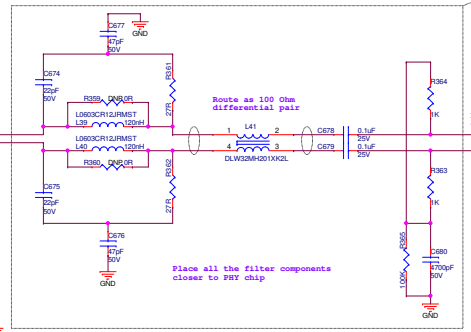

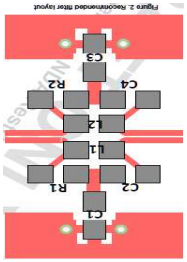

Ethernet Connector

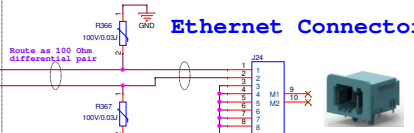

Having a mating connector 2302454-9 on wire

Bootstrap Pins

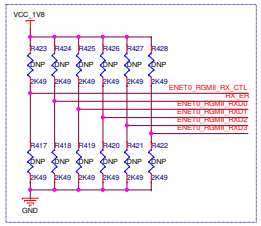

MODE	IDEAL RH (k ohm)	IDEAL RL (k ohm)
1	OPEN	OPEN
2	10	2.49
3	5.76	2.49
4	2.49	OPEN

All the strapping pins are in Mode 1 by default

Indication LED

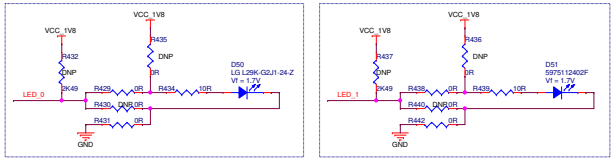

Green LED --> Vf = 1.7V
If = (1.8 - 1.7)/10
= 10mA

Red LED --> Vf = 1.7V
If = (1.8 - 1.7)/10
= 10mA

	MODE	VALUE	CONFIGURATION	MOUNT	DO NOT MOUNT	
LED_0	1	0	Slave	R429, R431	R432, R435, R430	Mode 1 by default
	4	1	Master	R432, R435, R430	R429, R431	
LED_1	1	0	Auto	R438, R442	R437, R436, R440	Mode 1 by default
	4	1	Managed	R437, R436, R440	R438, R442	

PATHPARTNER
#16, "PSS Plaza", 1st and 2nd Floor,New Thippasandra Main Road,
H.A.L. III Stage, Bangalore - 560 075 INDIA
Phone: 91-80-6772 2000

PROJECT NAME: DRIVER_DROWSINESS_DETECTION			
SHEET CONTENT: WIFI/BT & ETHERNET PHY			
Designed By PATHPARTNER	Size		Rev
Approved By	A2		2.0
Date: Wednesday, July 28, 2021	Page No.: 20 Of 24		