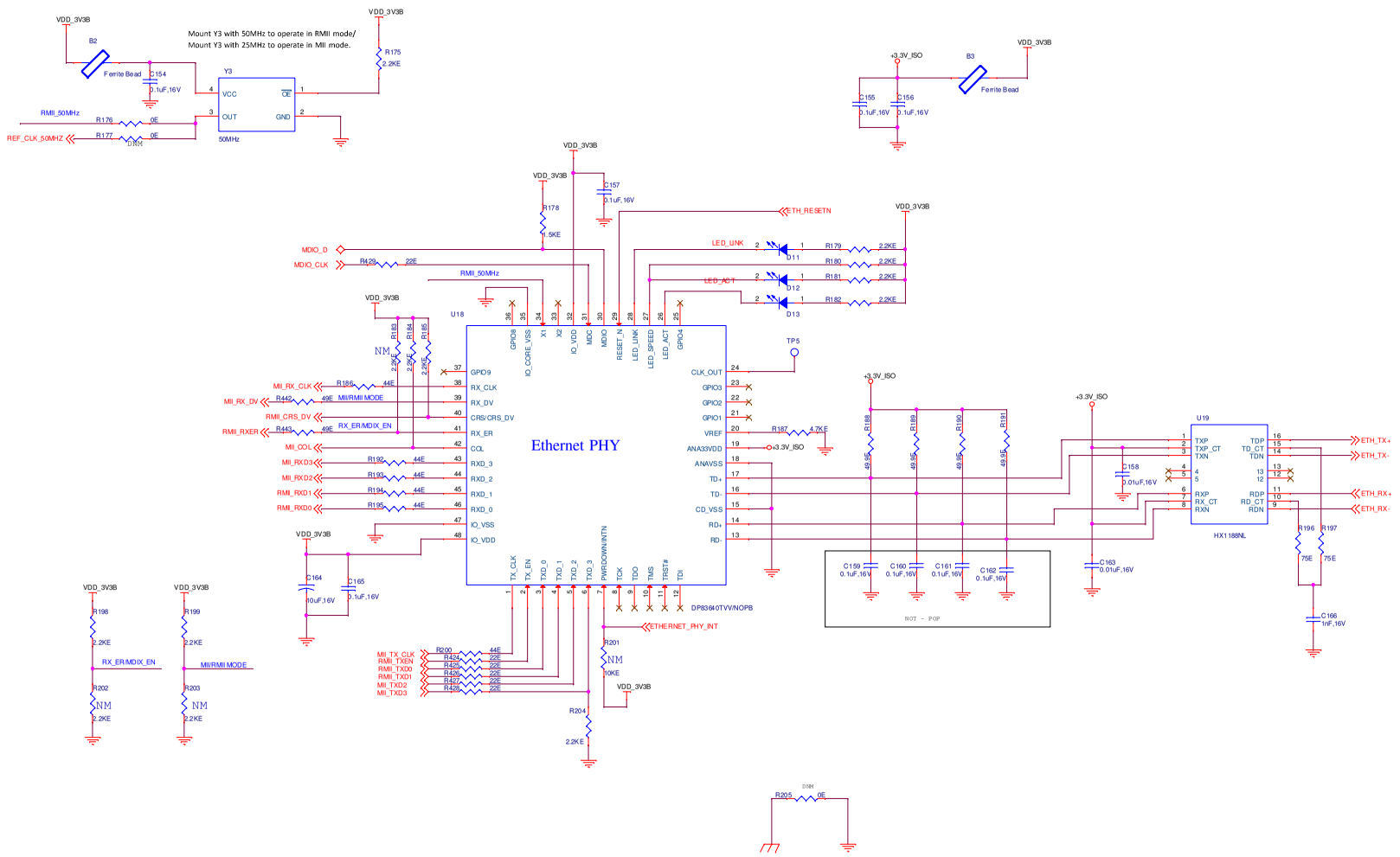

PROJECT : DISPLAY UNIT	
DOC.NAME : Processor Board SCH	
TITLE : 10/100 Ethernet Interface	
PREPARED BY: <prepared by>	DOCUMENT NO : <document no.> - SCH
REVIEWED BY: <reviewed by>	RELEASE DATE: 24/07/2019
	MODIFIED DATE: --
APPROVED BY: <approved by>	Rev: 1.0 Size A2
This Schematics is the property of SLN Technologies PVT. LTD. It should not copied or communicated to any person without the written approval of proprietors.	SLN Technologies Pvt Ltd.
	Sheet 12 of 14