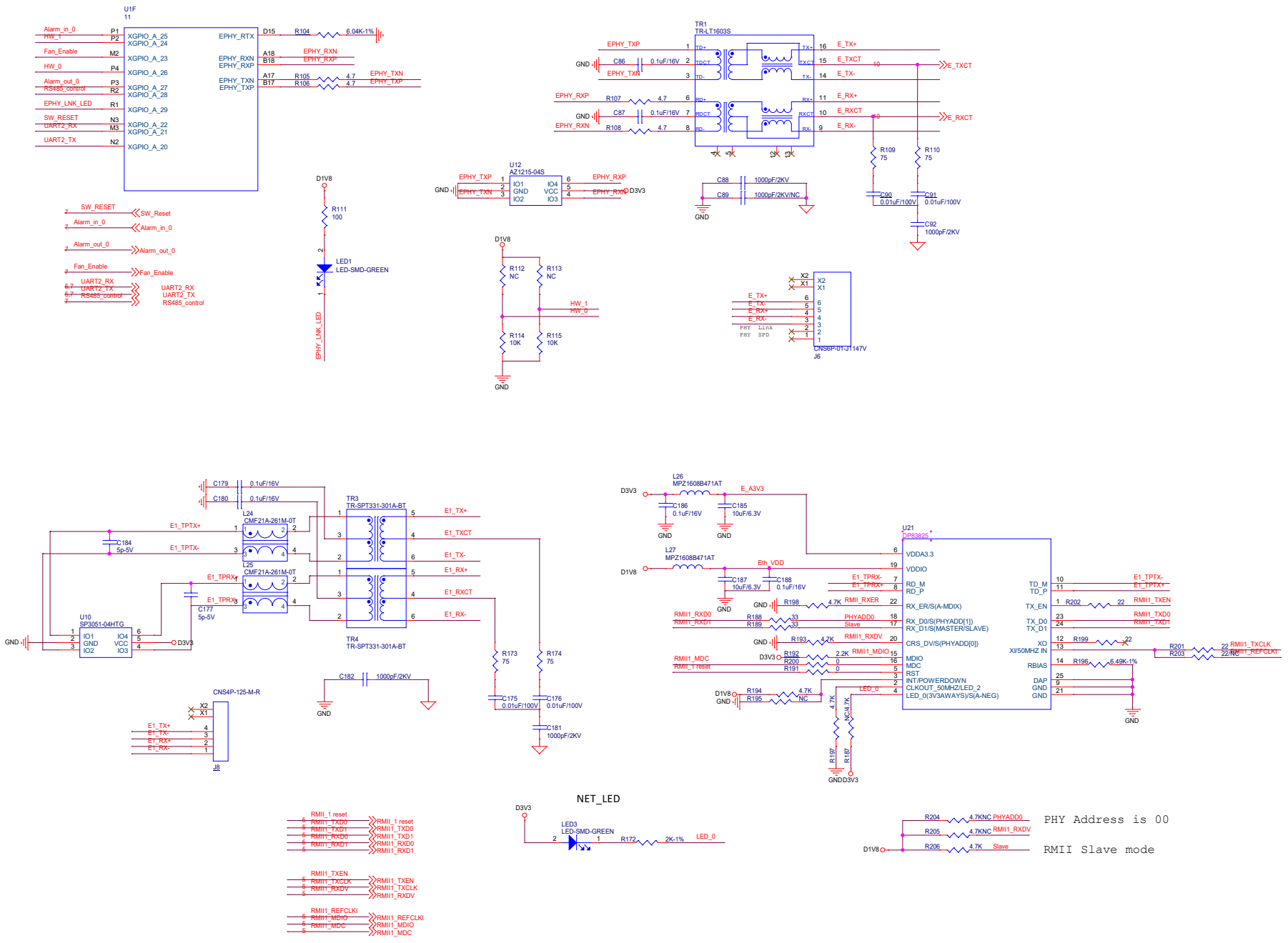
U1F
11
Alarm_in_0
HW_1
Fan_Enable
HW_0
Alarm_out_0
RS485_control
EPHY_LNK_LED
SW_RESET
UART2_RX
UART2_TX
XGPIO_A_25
XGPIO_A_24
XGPIO_A_23
XGPIO_A_26
XGPIO_A_27
XGPIO_A_28
XGPIO_A_29
XGPIO_A_22
XGPIO_A_21
XGPIO_A_20
EPHY_RTX
EPHY_RXN
EPHY_RXP
EPHY_TXN
EPHY_TXP
R104 6.04K-1%
R105 4.7
R106 4.7
TR1
TR-LT1603S
EPHY_TXP
EPHY_TXN
EPHY_RXP
EPHY_RXN
C86 0.1uF/16V
C87 0.1uF/16V
R107 4.7
R108 4.7
E_TX+
E_TXCT
E_TX-
E_RX+
E_RXCT
E_RX-
E_TXCT
E_RXCT
R109 75
R110 75
C90 0.01uF/100V
C91 0.01uF/100V
C92 1000pF/2KV
U12
AZ1215-04S
C88 1000pF/2KV
C89 1000pF/2KV/NC
D1V8
R111 100
LED1
LED-SMD-GREEN
EPHY_LNK_LED
R112 NC
R113 NC
R114 10K
R115 10K
HW_1
HW_0
J6
CNS6P-01-J1147V
SW_Reset
Alarm_in_0
Alarm_out_0
Fan_Enable
UART2_RX
UART2_TX
RS485_control
C179 0.1uF/16V
C180 0.1uF/16V
C184 5p-5V
C177 5p-5V
L24
CMF21A-261M-0T
L25
CMF21A-261M-0T
TR3
TR-SPT331-301A-BT
TR4
TR-SPT331-301A-BT
E1_TPTX+
E1_TPTX-
E1_TPRX+
E1_TPRX-
E1_TX+
E1_TXCT
E1_TX-
E1_RX+
E1_RXCT
E1_RX-
U10
SP3051-04HTG
D3V3
R173 75
R174 75
C175 0.01uF/100V
C176 0.01uF/100V
C181 1000pF/2KV
C182 1000pF/2KV
CNS4P-125-M-R
J8
L26
MPZ1608B471AT
L27
MPZ1608B471AT
E_A3V3
C186 0.1uF/16V
C185 10uF/6.3V
C187 10uF/6.3V
C188 0.1uF/16V
Eth_VDD
U21
DP83825
VDDA3.3
VDDIO
RD_M
RD_P
RX_ER/S(A-MDIX)
RX_D0/S(PHYADD[1])
RX_D1/S(MASTER/SLAVE)
CRS_DV/S(PHYADD[0])
MDIO
MDC
RST
INT/POWERDOWN
CLKOUT_50MHZ/LED_2
LED_0(3V3AWAYS)/S(A-NEG)
TD_M
TD_P
TX_EN
TX_D0
TX_D1
XO
XI/50MHZ IN
RBIAS
DAP
GND
R198 4.7K
R188 33
R189 33
R193 4.7K
R192 2.2K
R200 0
R191 0
R194 4.7K
R195 NC
R196 6.49K-1%
R199 22
R202 22
R201 22
R203 22/NC
RMII1_RXER
PHYADD0
RMII1_RXDV
RMII1_MDIO
LED_0
RMII1_RXD0
RMII1_RXD1
RMII1_MDC
RMII1_1 reset
RMII1_TXEN
RMII1_TXD0
RMII1_TXD1
RMII1_TXCLK
RMII1_REFCLKI
R197 4.7K
R187 NC/4.7K
NET_LED
LED3
LED-SMD-GREEN
R172 2K-1%
R204 4.7KNC PHYADD0
R205 4.7KNC RMII1_RXDV
R206 4.7K Slave
PHY Address is 00
RMII Slave mode