# SFP Port A Media Converter

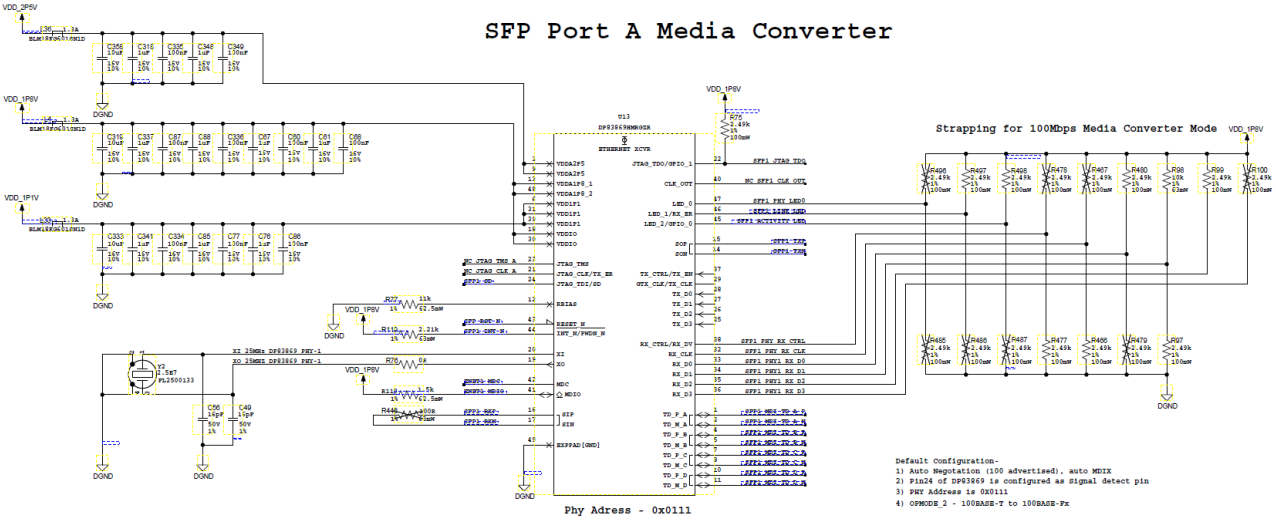

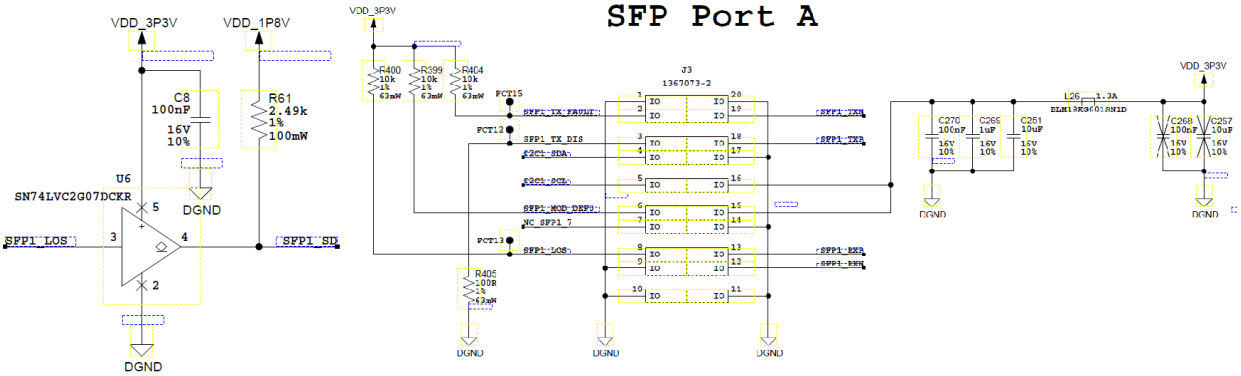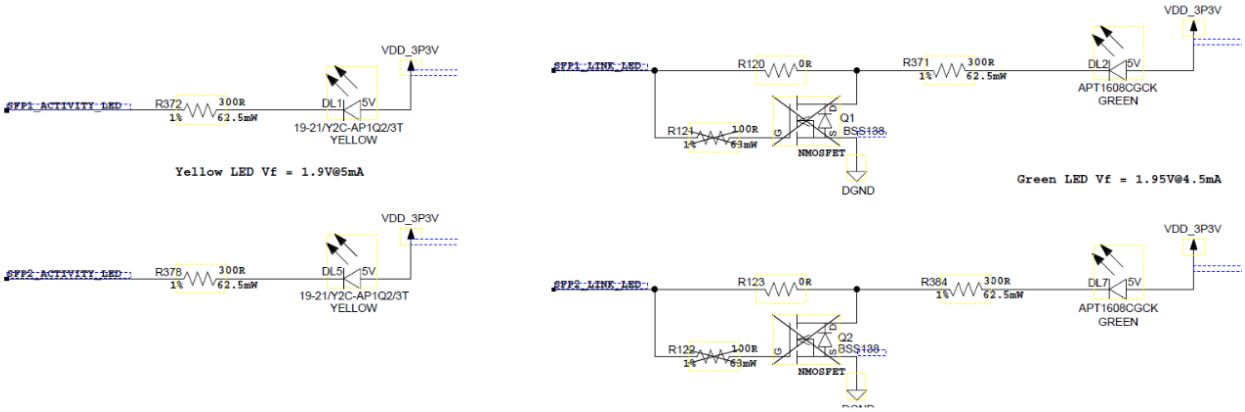
# SFP Port A