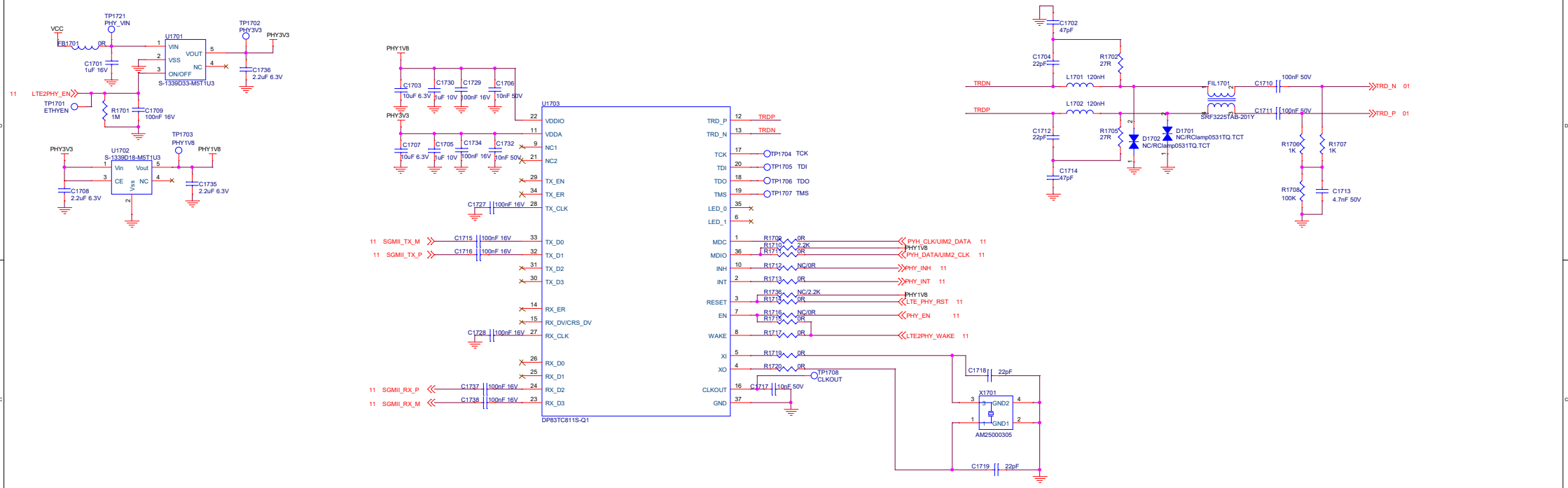

Flairmicro Confidential File 慧翰机密文件					
Designed by:		Changes List	Date:	Flairmicro 福建慧翰微电子 股份有限 公 司 Flaircomm Microelectronics	Project Name: TBOX3.6
Reviewed by:				Title TBOX3.6	
Approved by:				Size A2 / Document Number TBOX3.6	Rev 0.1
				Date: Thursday, January 10, 2019	Sheet 17 of 17

文档中未注明精度 的电阻默认为5%精 度， 未注明 精度 的电容 默 认 为20 %精度