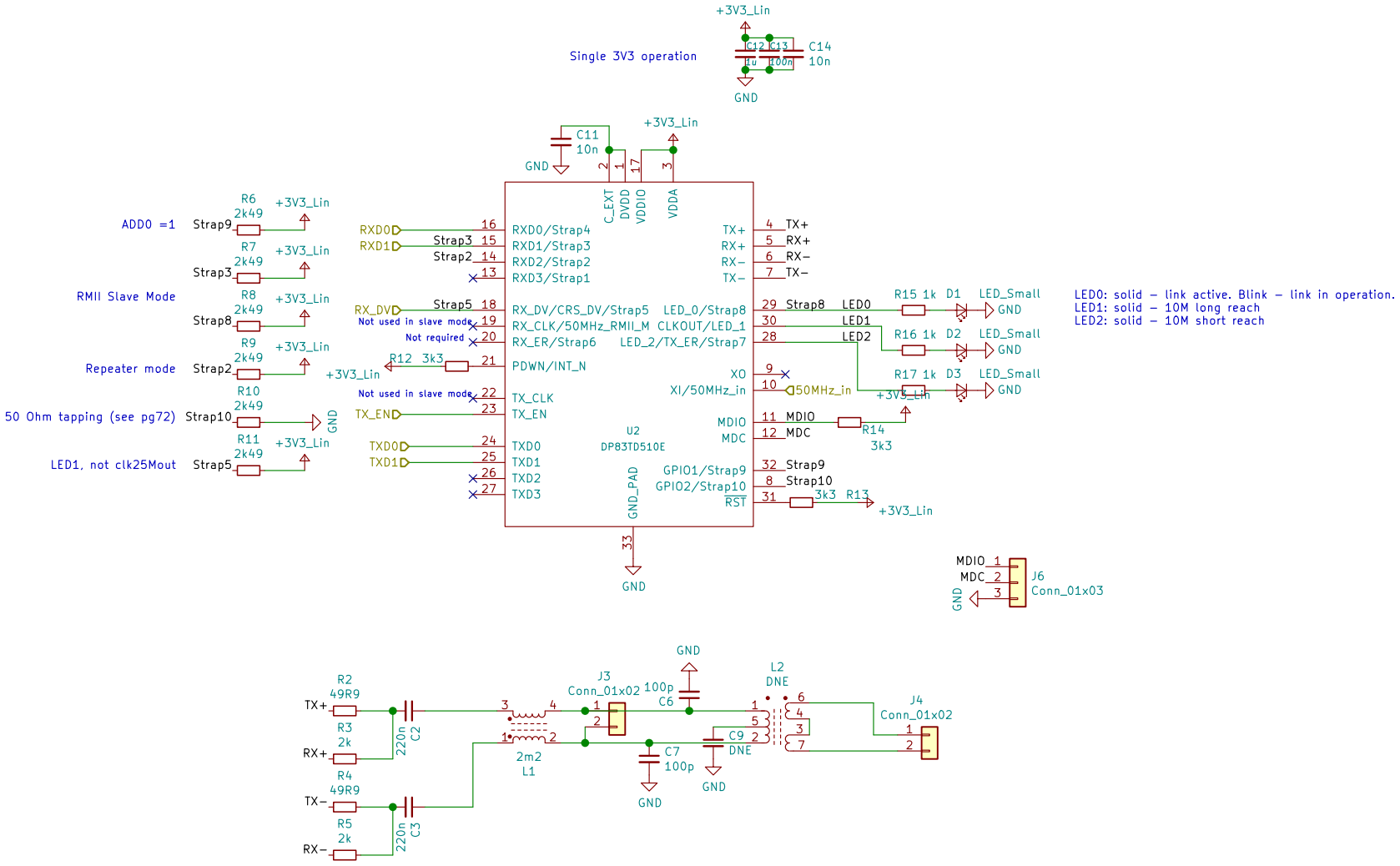

Sheet: /DP83TD510E/
File: DP83TD510E.sch

Title:

Size: A4	Date:	Rev:
KiCad E.D.A. kicad (5.1.4)-1		Id: 2/3