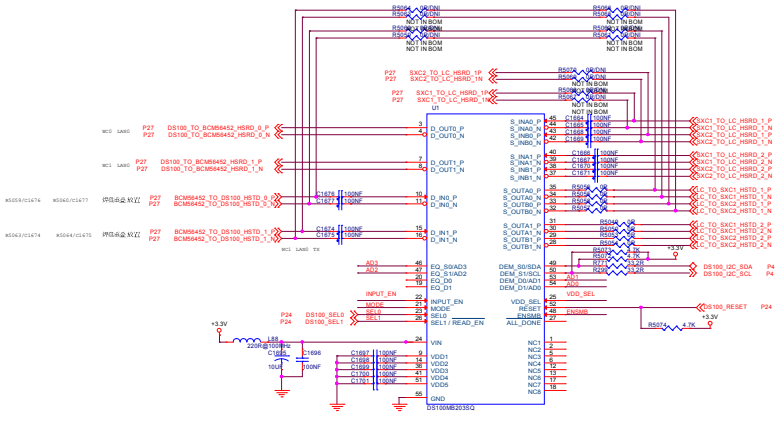


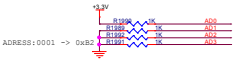


ADRESS:0001 -> 0xB2

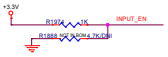


| INPUT_EN | Description |
|---|---|
| 0 | SEL0/1 to select the A or B input/output |
| 1 | FANOUT is enabled |
| float | SEL0/1 to determine which input or output to enable |

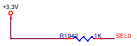


| SEL0 | Description |
|---|---|
| 0 | selects input S INA0s , output S OUTA0s . |
| 1 | selects input S INA0s , output S OUTA0s .Default |
| float | selects input S INA0s , output S OUTA0s . |

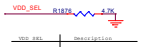


| VDD_SEL | Description |
|---|---|
| 0 | 1.1-V mode |
| float | 2.5-V mode |

| MODE | Description |
|---|---|
| 0 | SATA/SAS, PCIe GEN 1/2 and 10GE |
| 1 | 10-GE |
| float | AUTO (PCIe GEN 1/2 or GEN 3) |

| SEL1 | Description |
|---|---|
| 0 | selects input S INA1s , output S OUTA1s |
| 1 | selects input S INA1s , output S OUTA1s .Default |
| float | selects input S INA1s , output S OUTA1s . |

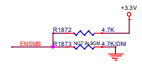


| ENSMB | Description |
|---|---|
| 0 | Pin Control Mode |
| 1 | SMBus Slave Mode |
| float | SMBus Master Mode |