REVISION RECORD			
LTR	ECO NO:	APPROVED:	DATE:
0	INITIAL RELEASE		
0	10758	ACF	2/15/12

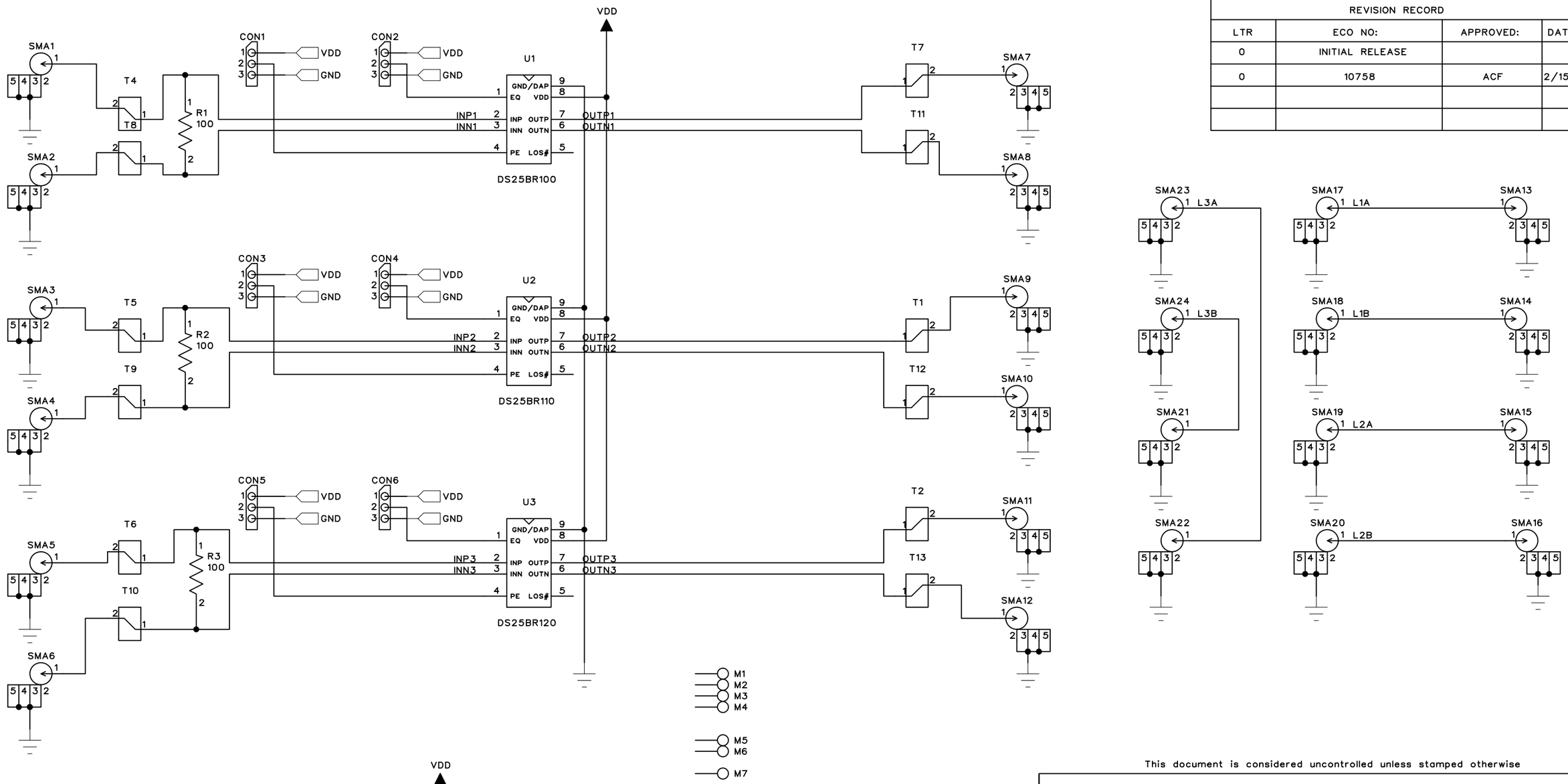

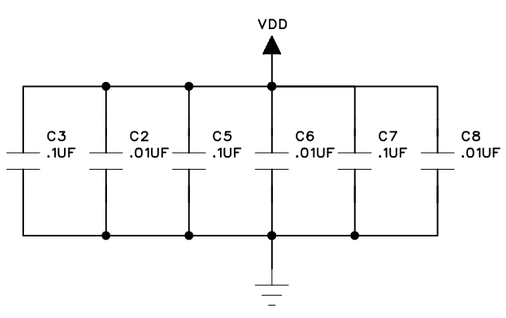

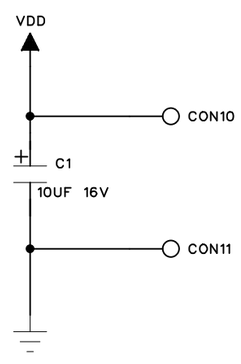

This document is considered uncontrolled unless stamped otherwise

COMPANY:

TITLE: SCHEMATIC DS25BR100-EVK, ROHS

Enercon Technologies
25 NorthBrook Drive
Gray, Maine 04039
U.S.A.

CODE:	SIZE:	DRAWING NO:	REV:
	C	S-05475	0

DRAWN: ACF

DATED: 10/24/06

SCALE:

SHEET: 1 OF 1