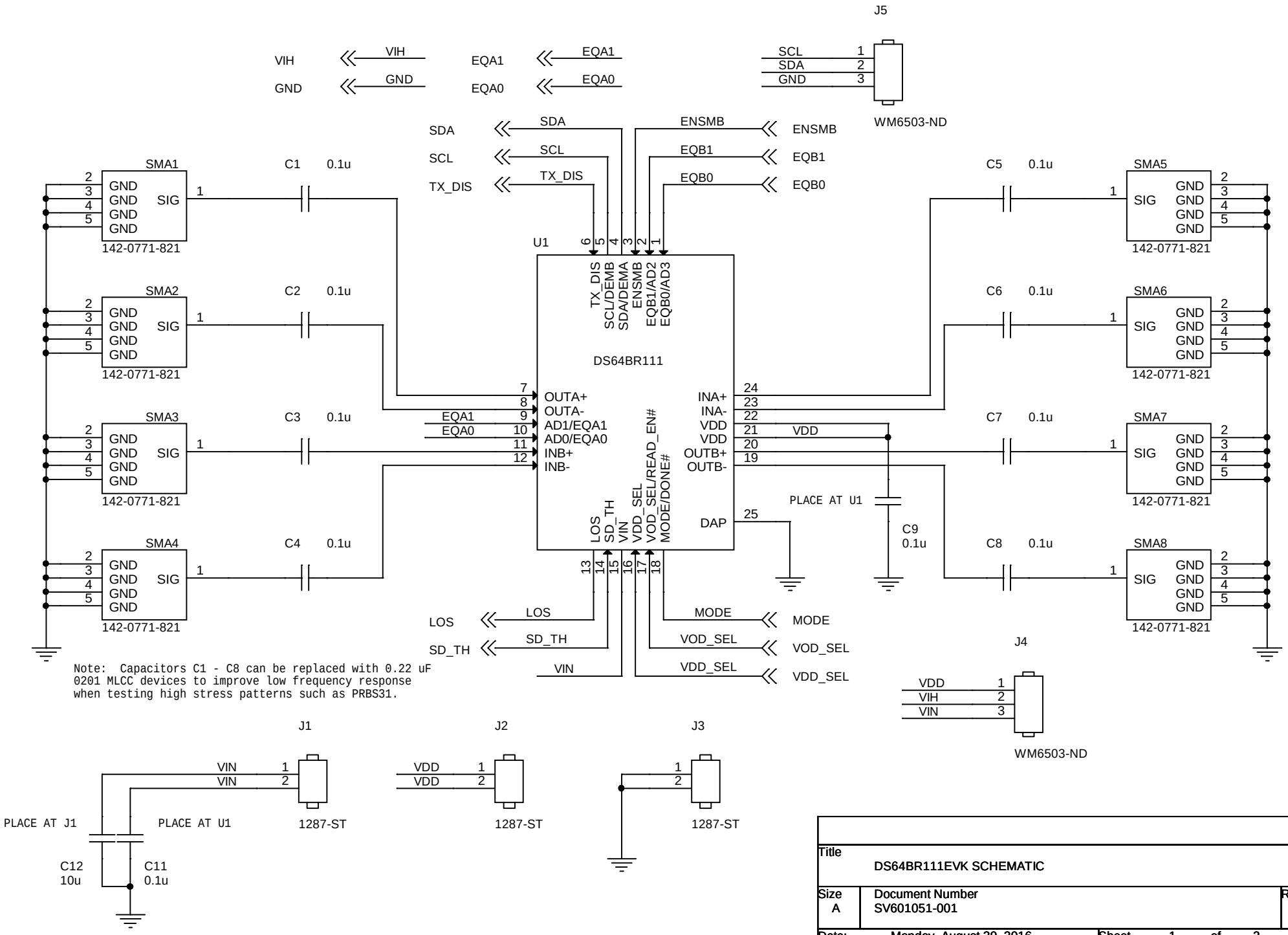

Title	DS64BR111EVK SCHEMATIC	
Size A	Document Number SV601051-001	Rev A
Date: Monday, August 29, 2016	Sheet 1 of 2	