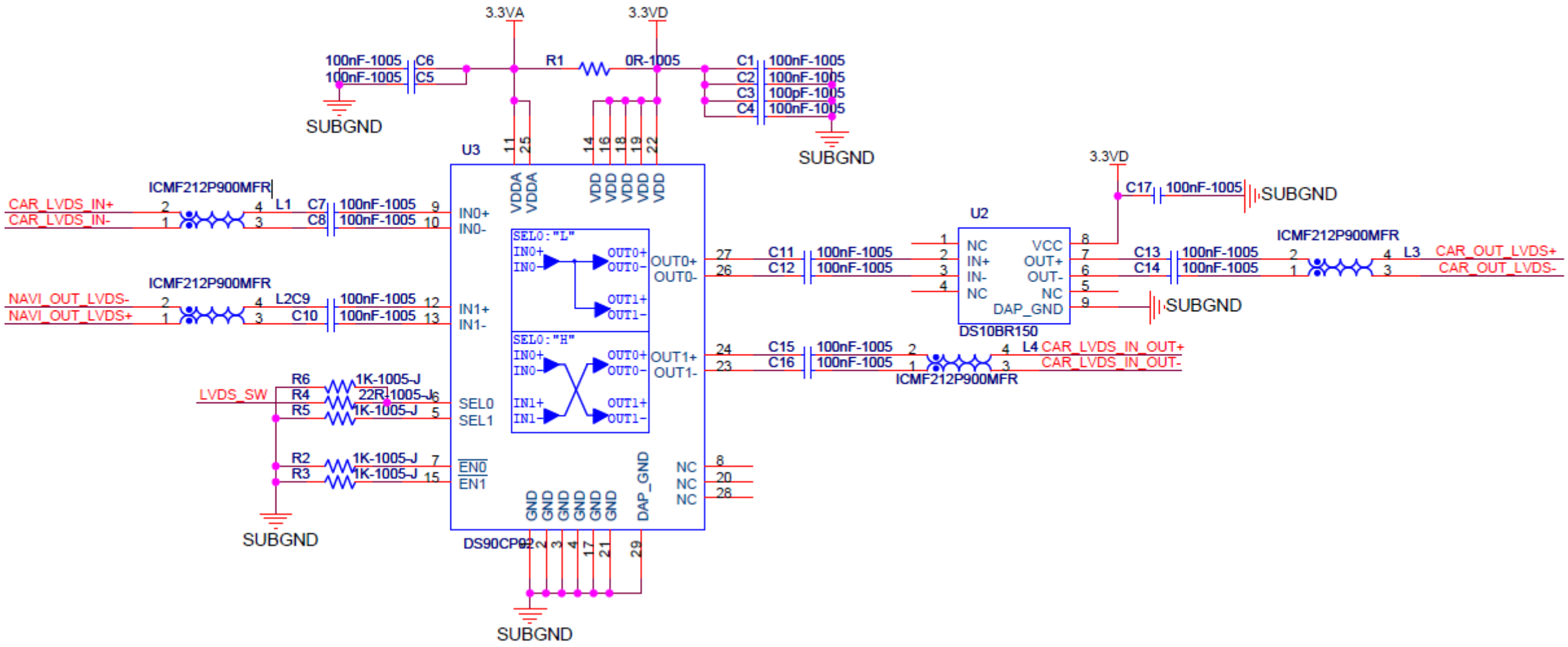
3.3VA
3.3VD
100nF-1005 C6
100nF-1005 C5
SUBGND
R1
0R-1005
C1 100nF-1005
C2 100nF-1005
C3 100pF-1005
C4 100nF-1005
SUBGND
U3
ICMF212P900MFR
CAR_LVDS_IN+
CAR_LVDS_IN-
L1
C7 100nF-1005
C8 100nF-1005
IN0+
IN0-
ICMF212P900MFR
NAVI_OUT_LVDS-
NAVI_OUT_LVDS+
L2C9
C10
100nF-1005
100nF-1005
IN1+
IN1-
LVDS_SW
R6 1K-1005-J
R4 22R-1005-J
R5 1K-1005-J
SEL0
SEL1
R2 1K-1005-J
R3 1K-1005-J
EN0
EN1
SUBGND
VDDA
VDD
SEL0:"L"
SEL0:"H"
OUT0+
OUT0-
OUT1+
OUT1-
DAP_GND
NC
GND
DS90CP02
C11 100nF-1005
C12 100nF-1005
C15 100nF-1005
C16 100nF-1005
U2
NC
IN+
IN-
VCC
OUT+
OUT-
DAP_GND
DS10BR150
3.3VD
C17 100nF-1005
SUBGND
C13 100nF-1005
C14 100nF-1005
SUBGND
ICMF212P900MFR
L3
CAR_OUT_LVDS+
CAR_OUT_LVDS-
L4
CAR_LVDS_IN_OUT+
CAR_LVDS_IN_OUT-
ICMF212P900MFR