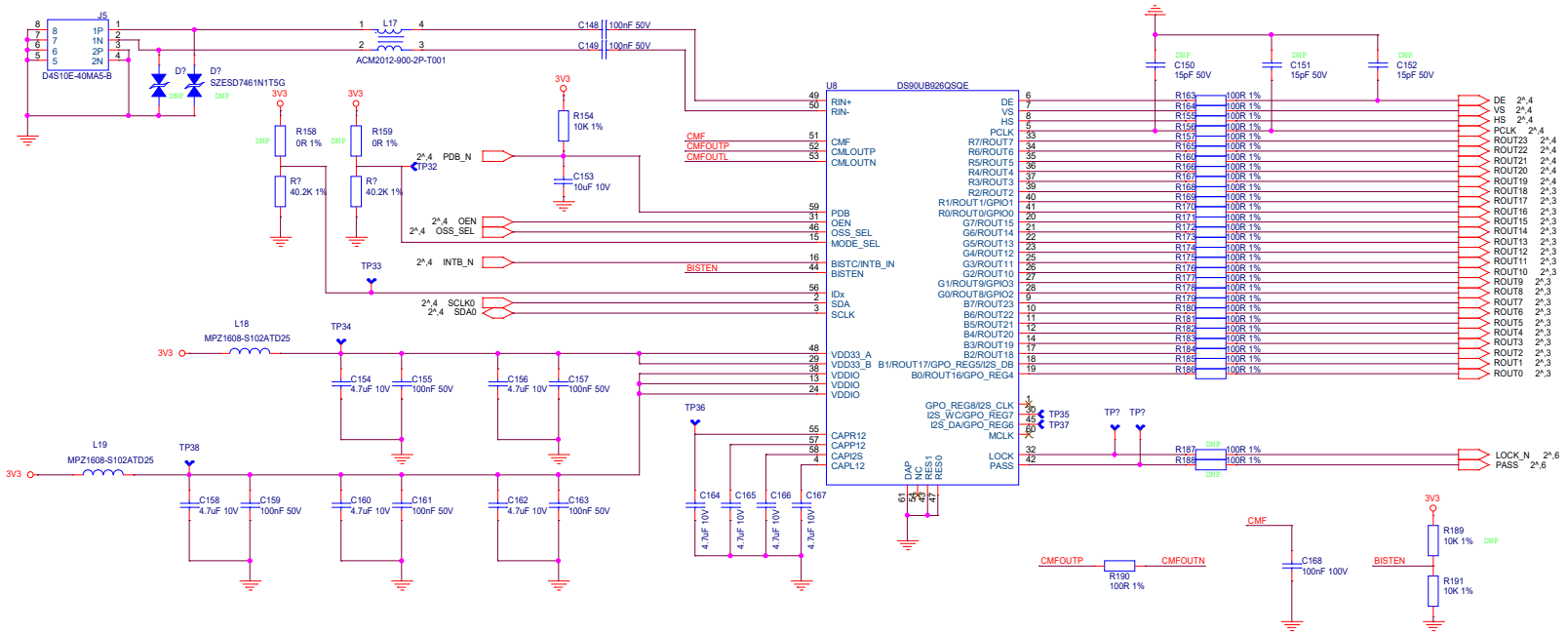

FUTURUS TECHNOLOGY	未来（北京）黑科技有限公司 北京经济技术开发区经开大厦17层	
Designer: 陈振兴	Drawing Title: R002_Hardware_platform	
Drawn by: 陈振兴	Page Name: 13-Deserializer	
Approved: 王瀚博	Size C	Rev 1
Modify Date: Tuesday, December 10, 2019	Scale	Sheet 13 of 18