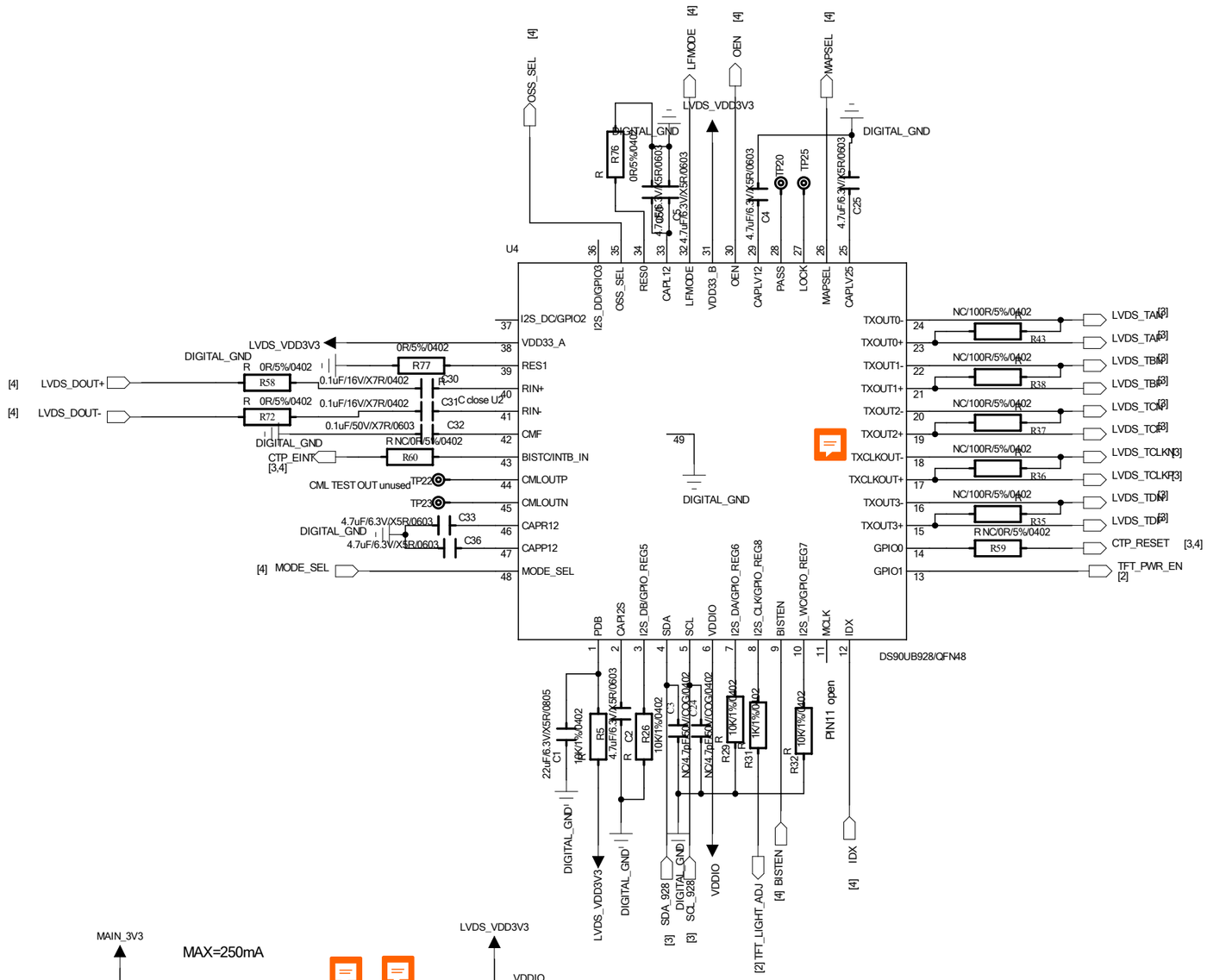

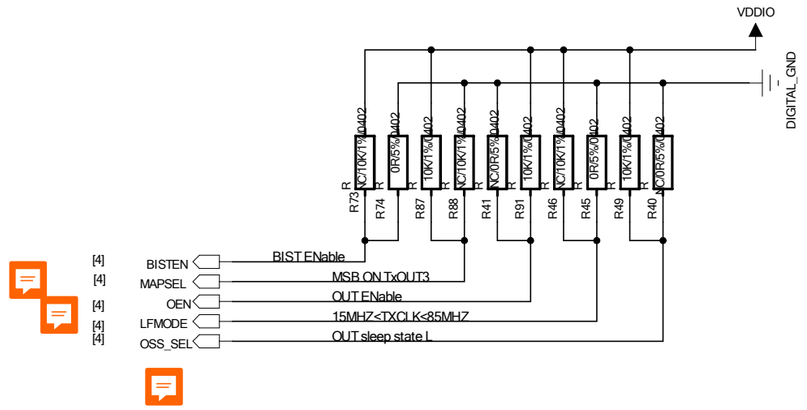

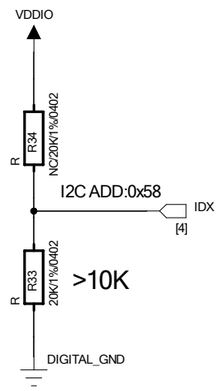

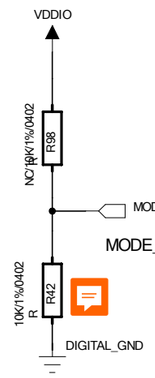

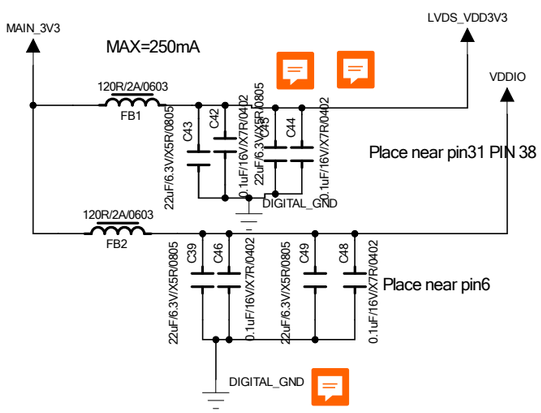

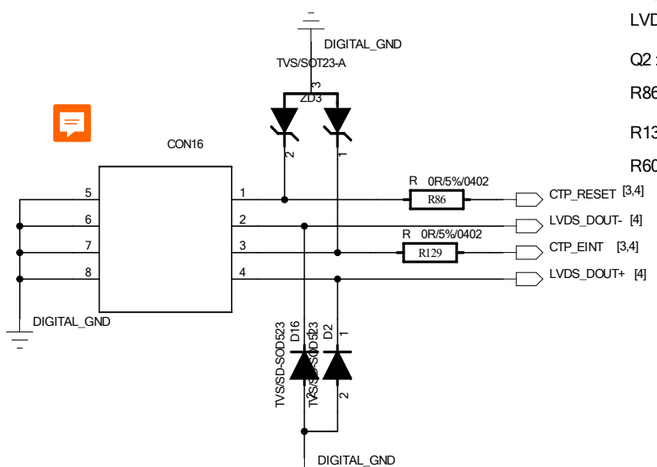

AM916:

C2:NC

C5 & C50 :NC

R76 & R77 :NC

LVDS DIFF OUT 100R :NC

Q2 :add

R86 &R129 :NC

R132:add

R60 & R59 :NC