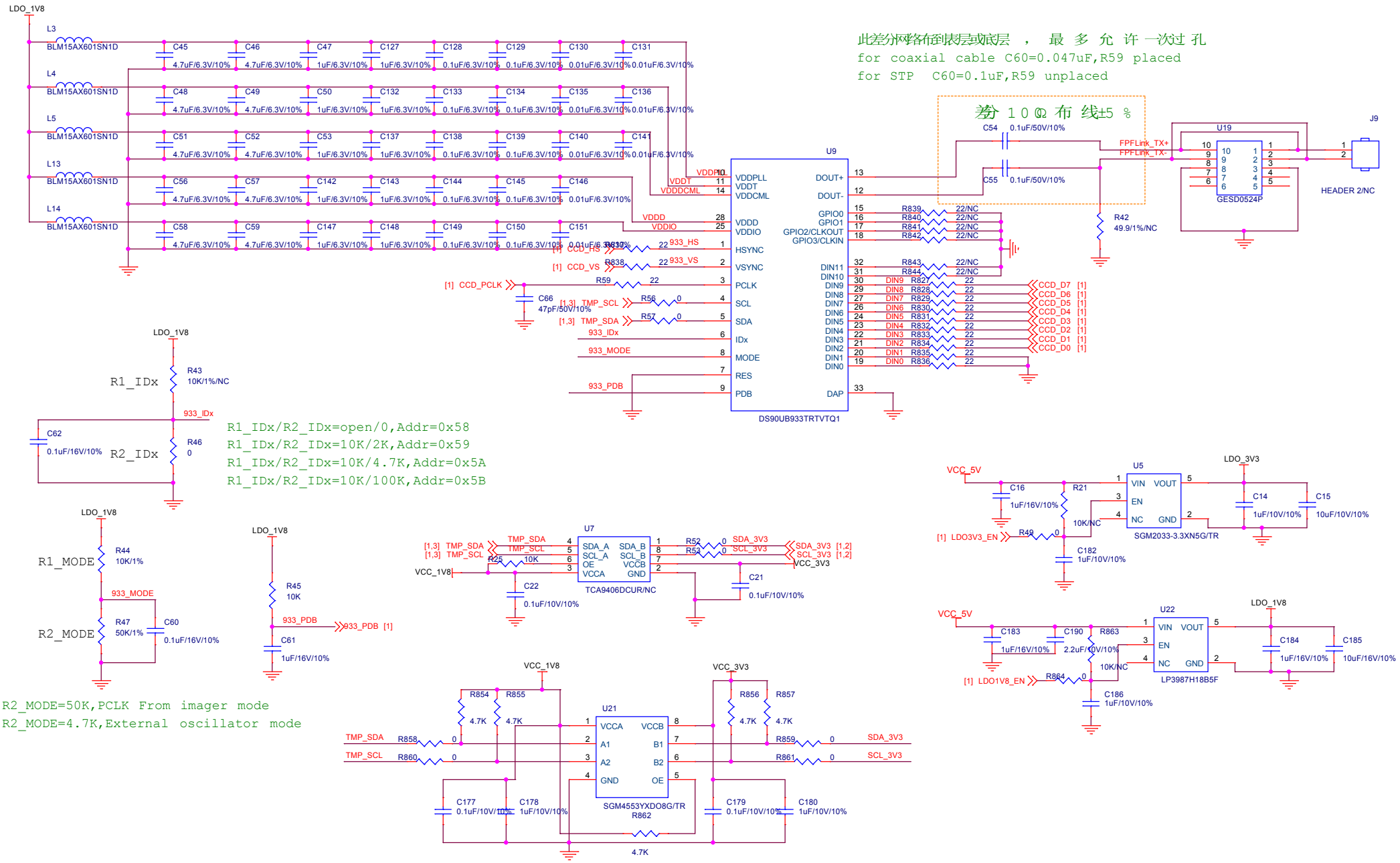
此差分网络布到表层或底层 ， 最 多 允 许 一次过 孔
for coaxial cable C60=0.047uF,R59 placed
for STP C60=0.1uF,R59 unplaced
差分 10Ω 布 线±5 %
DS90UB933TRTVTQ1
U9
J9
HEADER 2/NC
U19
GESD0524P
FPFLink_TX+
FPFLink_TX-
R42
49.9/1%/NC
R1_IDx
R2_IDx
R1_IDx/R2_IDx=open/0,Addr=0x58
R1_IDx/R2_IDx=10K/2K,Addr=0x59
R1_IDx/R2_IDx=10K/4.7K,Addr=0x5A
R1_IDx/R2_IDx=10K/100K,Addr=0x5B
R1_MODE
R2_MODE
R2_MODE=50K,PCLK From imager mode
R2_MODE=4.7K,External oscillator mode
TCA9406DCUR/NC
U7
U5
SGM2033-3.3XN5G/TR
U22
LP3987H18B5F
U21
SGM4553YXDO8G/TR
Title
DS90UB933
Size
A3
Document Number
<Doc>
Rev
V1.0
Date:
Monday, June 17, 2019
Sheet
3
of
3