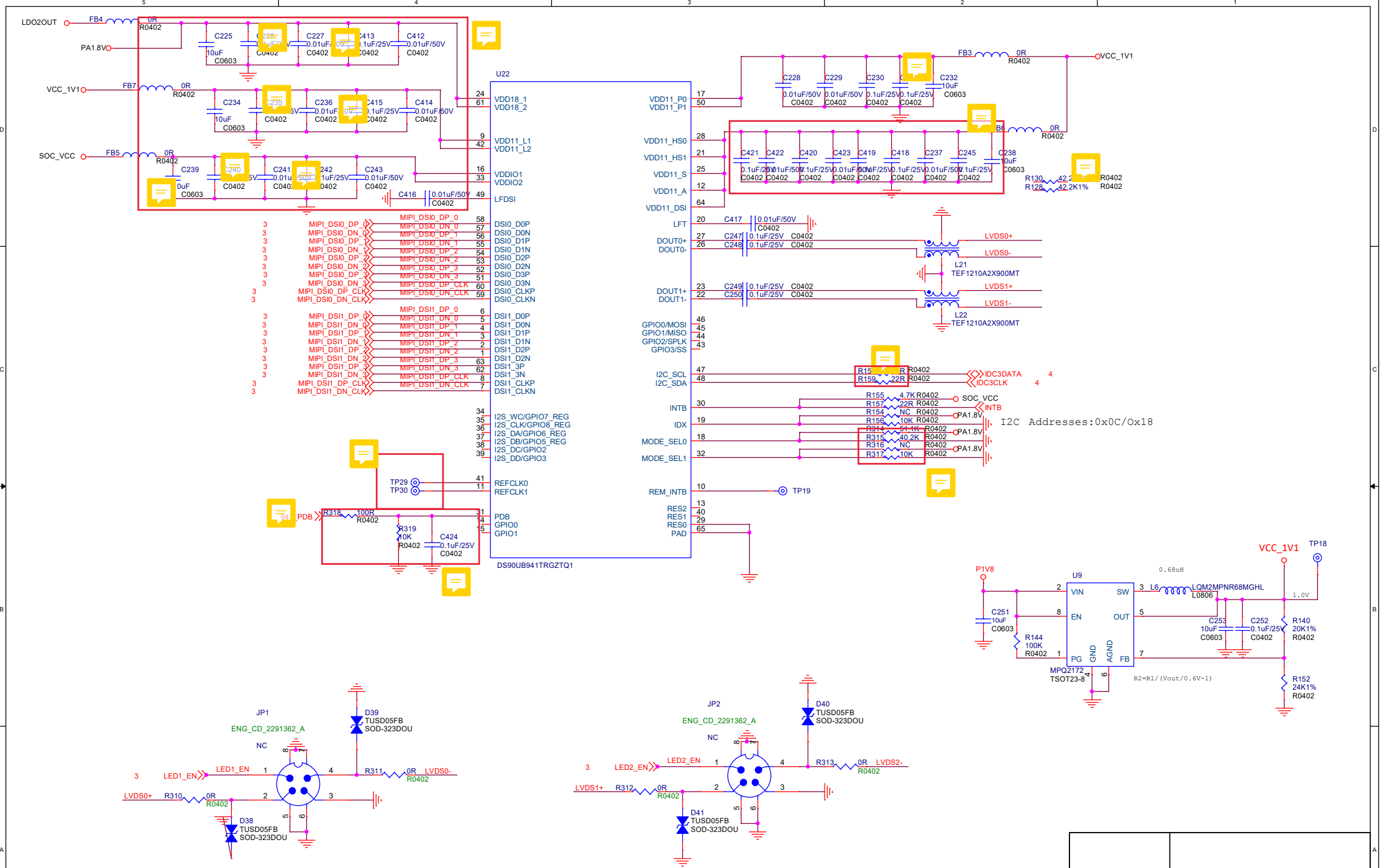

Confidential

Title

Size	Document Number	Rev
A3		X0

Date: Tuesday, July 12, 2022 Sheet 10 of 15