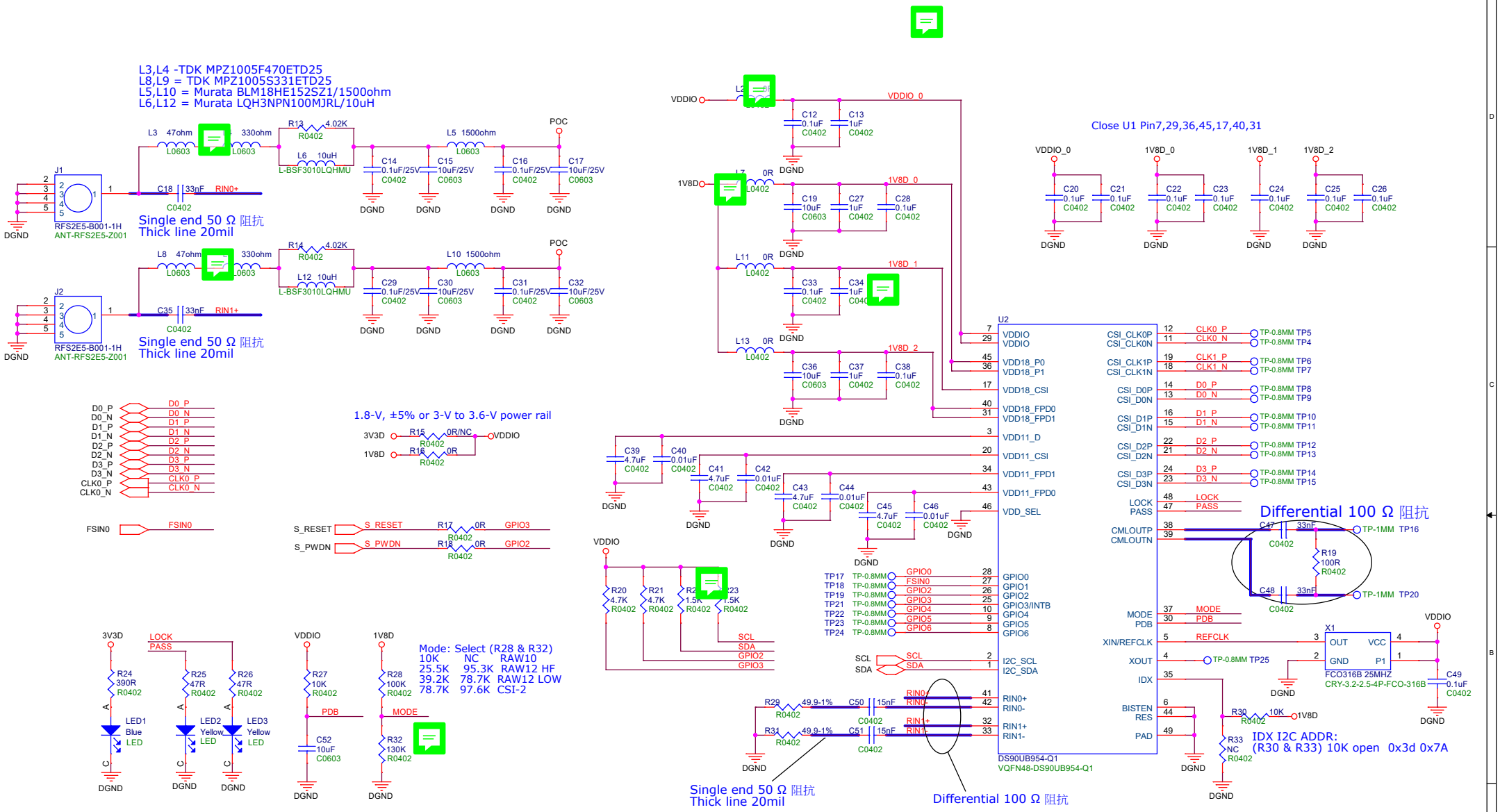

Title	TI954
Size A3	Document Number R-19W000LA
Rev	1.1
Date:	Friday, January 13, 2023
Sheet	2 of 3