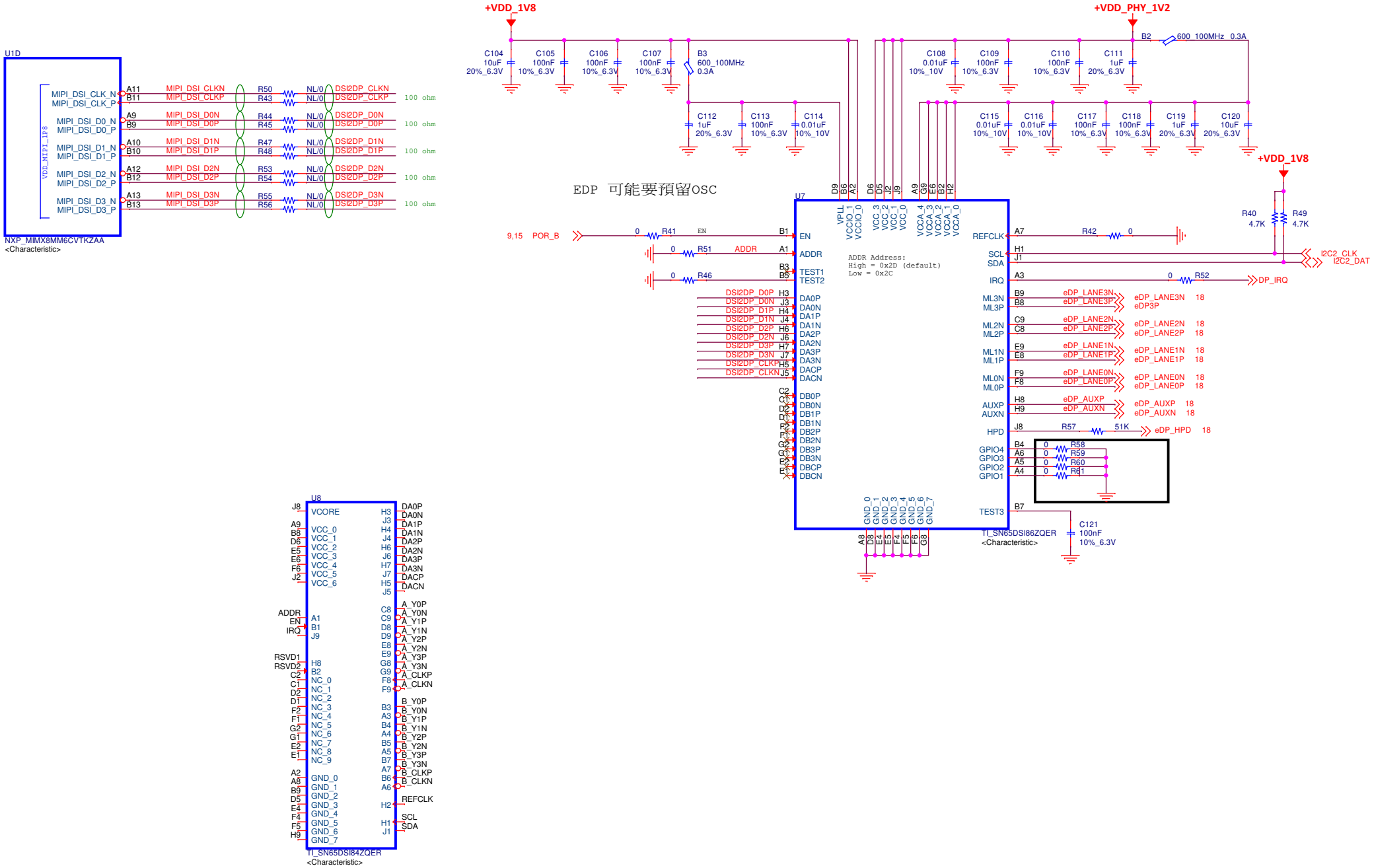
U1D
NXP_MIMX8MM6CVTKZAA
<Characteristic>
VDD_MIPI_1P8
MIPI_DSI_CLK_N
MIPI_DSI_CLK_P
MIPI_DSI_D0_N
MIPI_DSI_D0_P
MIPI_DSI_D1_N
MIPI_DSI_D1_P
MIPI_DSI_D2_N
MIPI_DSI_D2_P
MIPI_DSI_D3_N
MIPI_DSI_D3_P
DSI2DP_CLKN
DSI2DP_CLKP
DSI2DP_D0N
DSI2DP_D0P
DSI2DP_D1N
DSI2DP_D1P
DSI2DP_D2N
DSI2DP_D2P
DSI2DP_D3N
DSI2DP_D3P
100 ohm
+VDD_1V8
+VDD_PHY_1V2
B3 600_100MHz 0.3A
B2 600_100MHz 0.3A
EDP 可能要預留OSC
U7
TI_SN65DSI86ZQER
<Characteristic>
ADDR Address:
High = 0x2D (default)
Low = 0x2C
9,15 POR_B
EN
ADDR
TEST1
TEST2
REFCLK
SCL
SDA
IRQ
DP_IRQ
I2C2_CLK
I2C2_DAT
R40 4.7K
R49 4.7K
eDP_LANE3N
eDP_LANE3P
eDP_LANE2N
eDP_LANE2P
eDP_LANE1N
eDP_LANE1P
eDP_LANE0N
eDP_LANE0P
eDP_AUXP
eDP_AUXN
eDP_HPD
HPD
GPIO4
GPIO3
GPIO2
GPIO1
TEST3
C121 100nF 10%_6.3V
U8
TI_SN65DSI84ZQER
<Characteristic>
VCORE
VCC_0
VCC_1
VCC_2
VCC_3
VCC_4
VCC_5
VCC_6
ADDR
EN
IRQ
RSVD1
RSVD2
NC_0
NC_1
NC_2
NC_3
NC_4
NC_5
NC_6
NC_7
NC_8
NC_9
GND_0
GND_1
GND_2
GND_3
GND_4
GND_5
GND_6
GND_7
DA0P
DA0N
DA1P
DA1N
DA2P
DA2N
DA3P
DA3N
DACP
DACN
A_Y0P
A_Y0N
A_Y1P
A_Y1N
A_Y2P
A_Y2N
A_Y3P
A_Y3N
A_CLKP
A_CLKN
B_Y0P
B_Y0N
B_Y1P
B_Y1N
B_Y2P
B_Y2N
B_Y3P
B_Y3N
B_CLKP
B_CLKN
REFCLK
SCL
SDA