

2 DSI Data Lane Configuration

Consumo corrente do 1V8 : 120mA

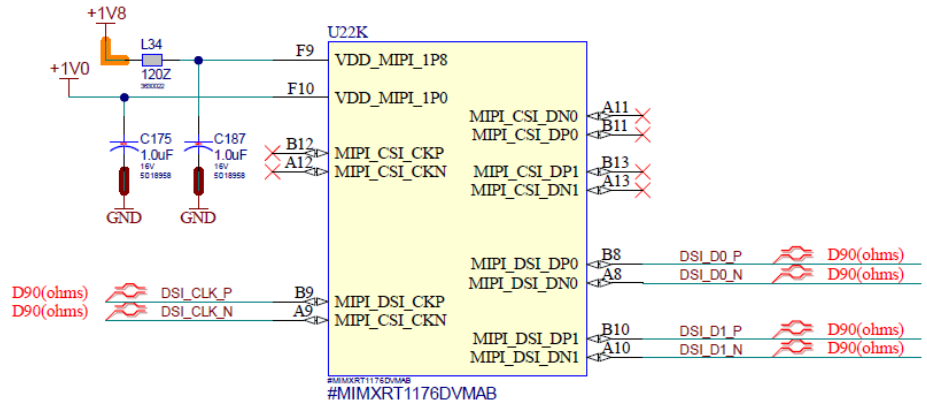

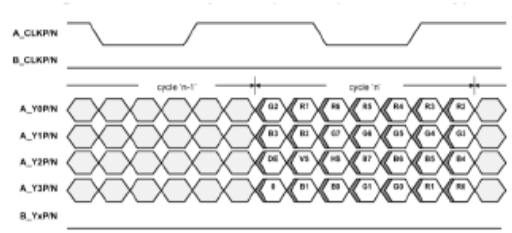

Figure 7-6. Flatlink Output Data (Format 1); Single-Link 24 Bpp

