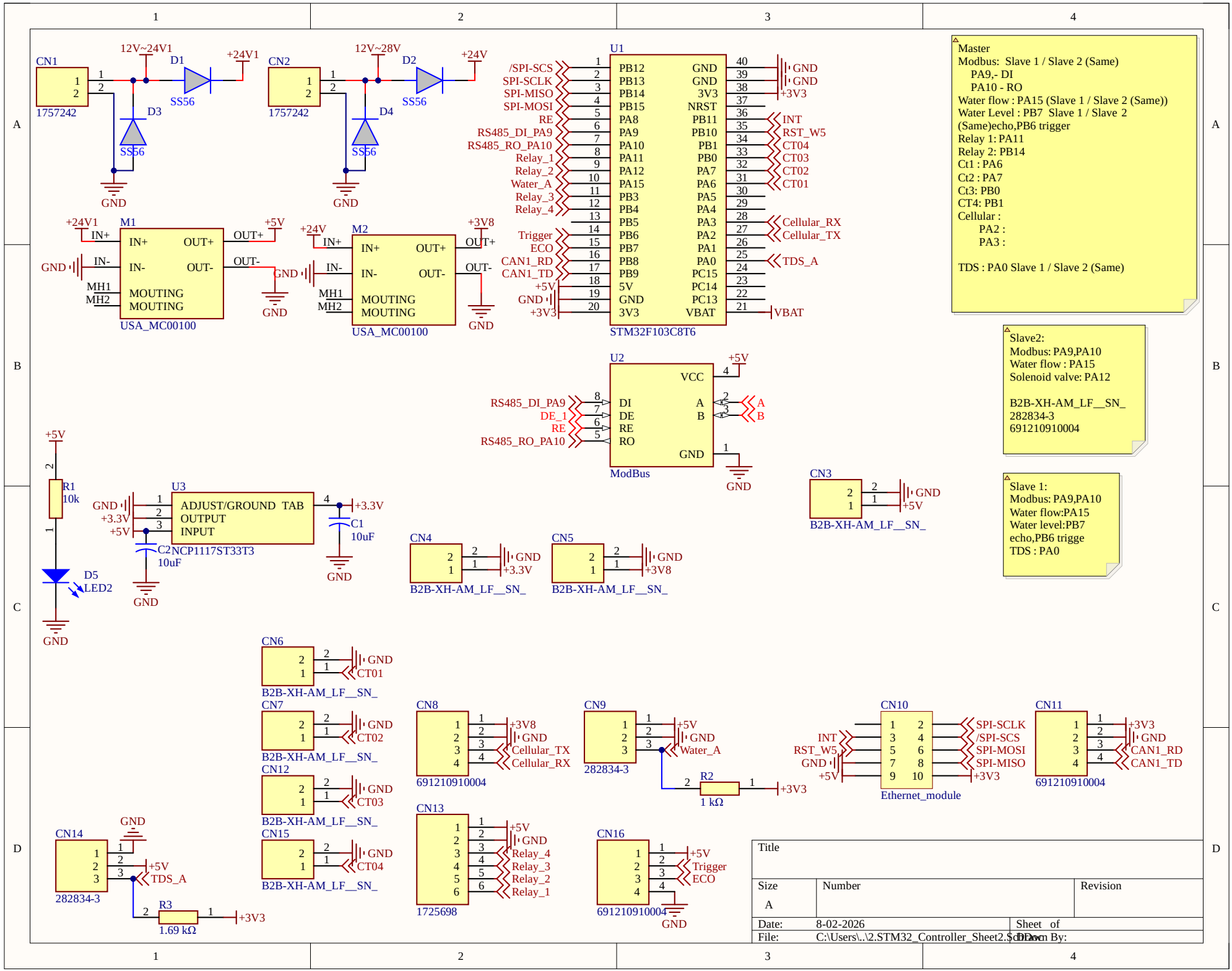
CN1
1757242
12V~24V1
D1
SS56
+24V1
D3
SS56
GND
CN2
1757242
12V~28V
D2
SS56
+24V
D4
SS56
GND
U1
STM32F103C8T6
/SPI-SCS
SPI-SCLK
SPI-MISO
SPI-MOSI
RE
RS485_DI_PA9
RS485_RO_PA10
Relay_1
Relay_2
Water_A
Relay_3
Relay_4
Trigger
ECO
CAN1_RD
CAN1_TD
+5V
GND
+3V3
INT
RST_W5
CT04
CT03
CT02
CT01
Cellular_RX
Cellular_TX
TDS_A
VBAT
M1
USA_MC00100
+24V1
IN+
IN-
MOUTING
MOUTING
OUT+
OUT-
+5V
M2
USA_MC00100
+24V
+3V8
U2
ModBus
VCC
DI
DE
RE
RO
A
B
U3
NCP1117ST33T3
ADJUST/GROUND TAB
OUTPUT
INPUT
+3.3V
C1
10uF
C2
10uF
R1
10k
D5
LED2
CN3
B2B-XH-AM_LF__SN_
CN4
B2B-XH-AM_LF__SN_
CN5
B2B-XH-AM_LF__SN_
CN6
B2B-XH-AM_LF__SN_
CT01
CN7
B2B-XH-AM_LF__SN_
CT02
CN12
B2B-XH-AM_LF__SN_
CT03
CN15
B2B-XH-AM_LF__SN_
CT04
CN8
691210910004
+3V8
Cellular_TX
Cellular_RX
CN9
282834-3
Water_A
R2
1 kΩ
CN10
Ethernet_module
SPI-SCLK
/SPI-SCS
SPI-MOSI
SPI-MISO
CN11
691210910004
CAN1_RD
CAN1_TD
CN13
1725698
Relay_4
Relay_3
Relay_2
Relay_1
CN14
282834-3
TDS_A
R3
1.69 kΩ
CN16
691210910004
Trigger
ECO
Master
Modbus: Slave 1 / Slave 2 (Same)
PA9,- DI
PA10 - RO
Water flow : PA15 (Slave 1 / Slave 2 (Same))
Water Level : PB7 Slave 1 / Slave 2
(Same)echo,PB6 trigger
Relay 1: PA11
Relay 2: PB14
Ct1 : PA6
Ct2 : PA7
Ct3: PB0
CT4: PB1
Cellular :
PA2 :
PA3 :
TDS : PA0 Slave 1 / Slave 2 (Same)
Slave2:
Modbus: PA9,PA10
Water flow : PA15
Solenoid valve: PA12
B2B-XH-AM_LF__SN_
282834-3
691210910004
Slave 1:
Modbus: PA9,PA10
Water flow:PA15
Water level:PB7
echo,PB6 trigge
TDS : PA0
Title
Size
A
Number
Revision
Date: 8-02-2026
Sheet of
File: C:\Users\..\2.STM32_Controller_Sheet2.SchDoc
Drawn By:

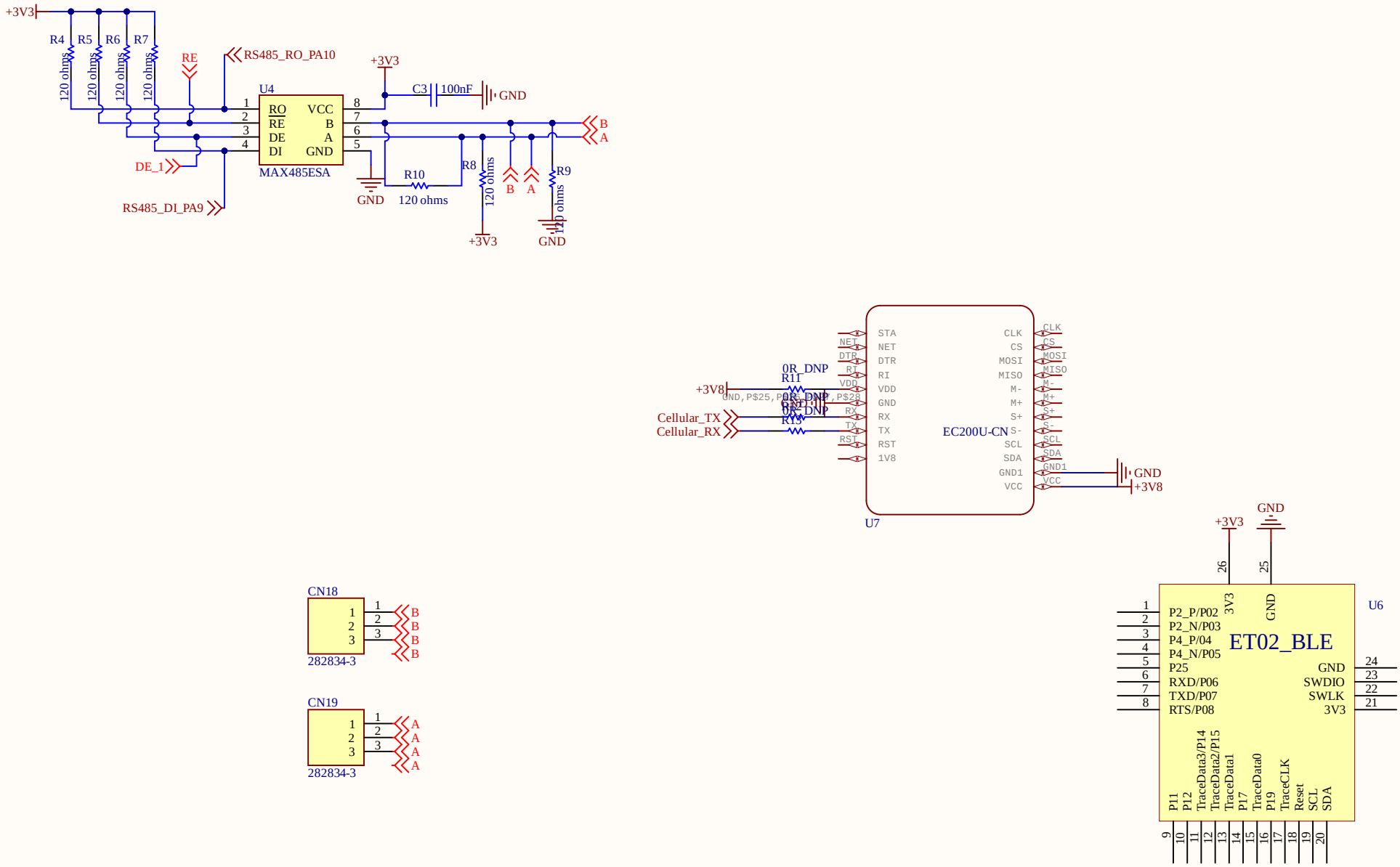

Title		
Size A4	Number	Revision
Date: 8-02-2026		Sheet of
File: C:\Users\..\Sheet1.SchDoc		Drawn By: