POWER

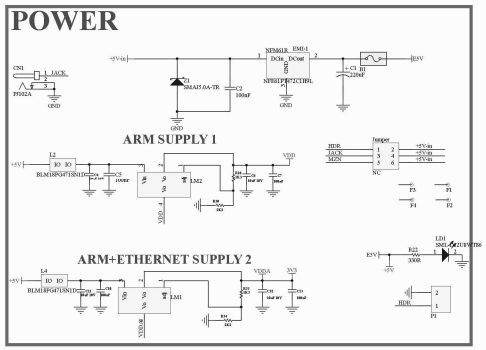

USB OTG FS

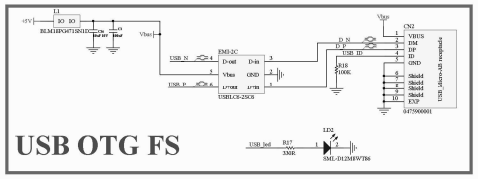

JTAG

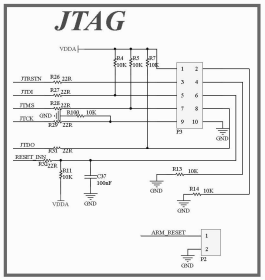

IO

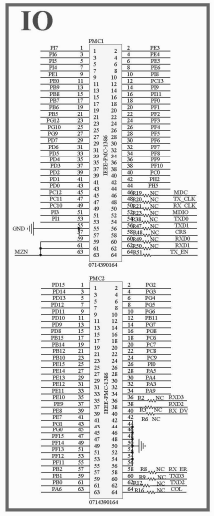

ETHERNET HABERLEŞME

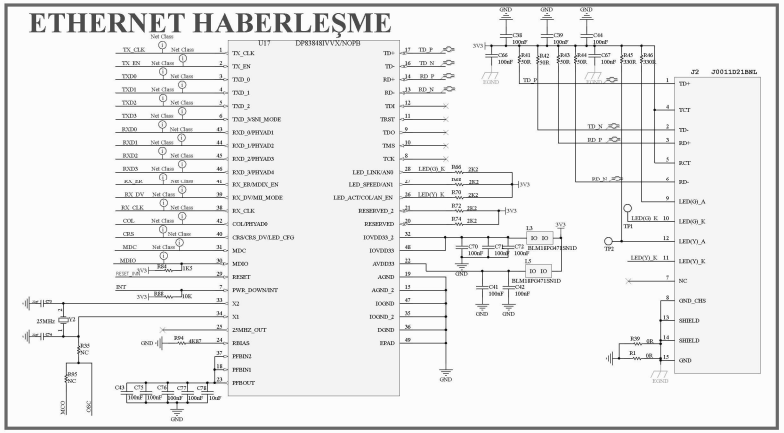

ARM

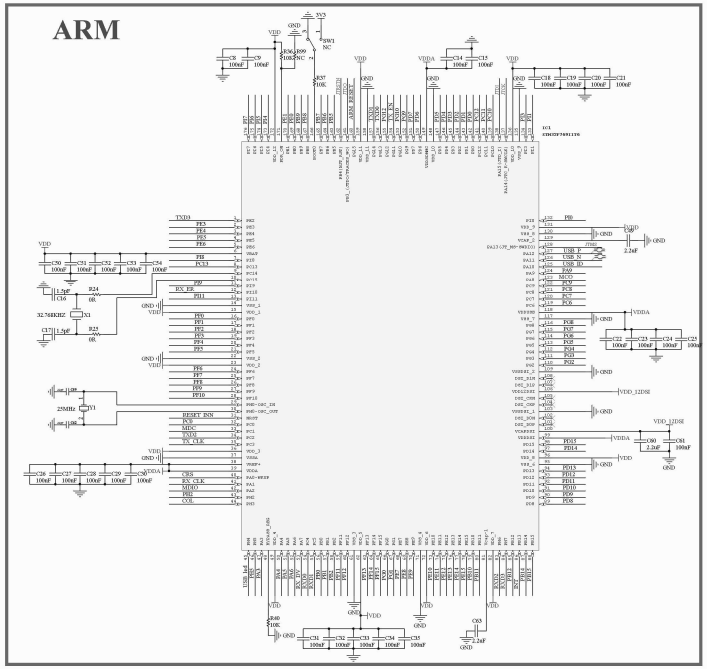

Title	
Size	A1
Number	
Revision	
Date:	4/16/2020
Sheet	of
File:	C:\Users...\ETHARM_PMC_11042020.SchDoc
Drawn By:	