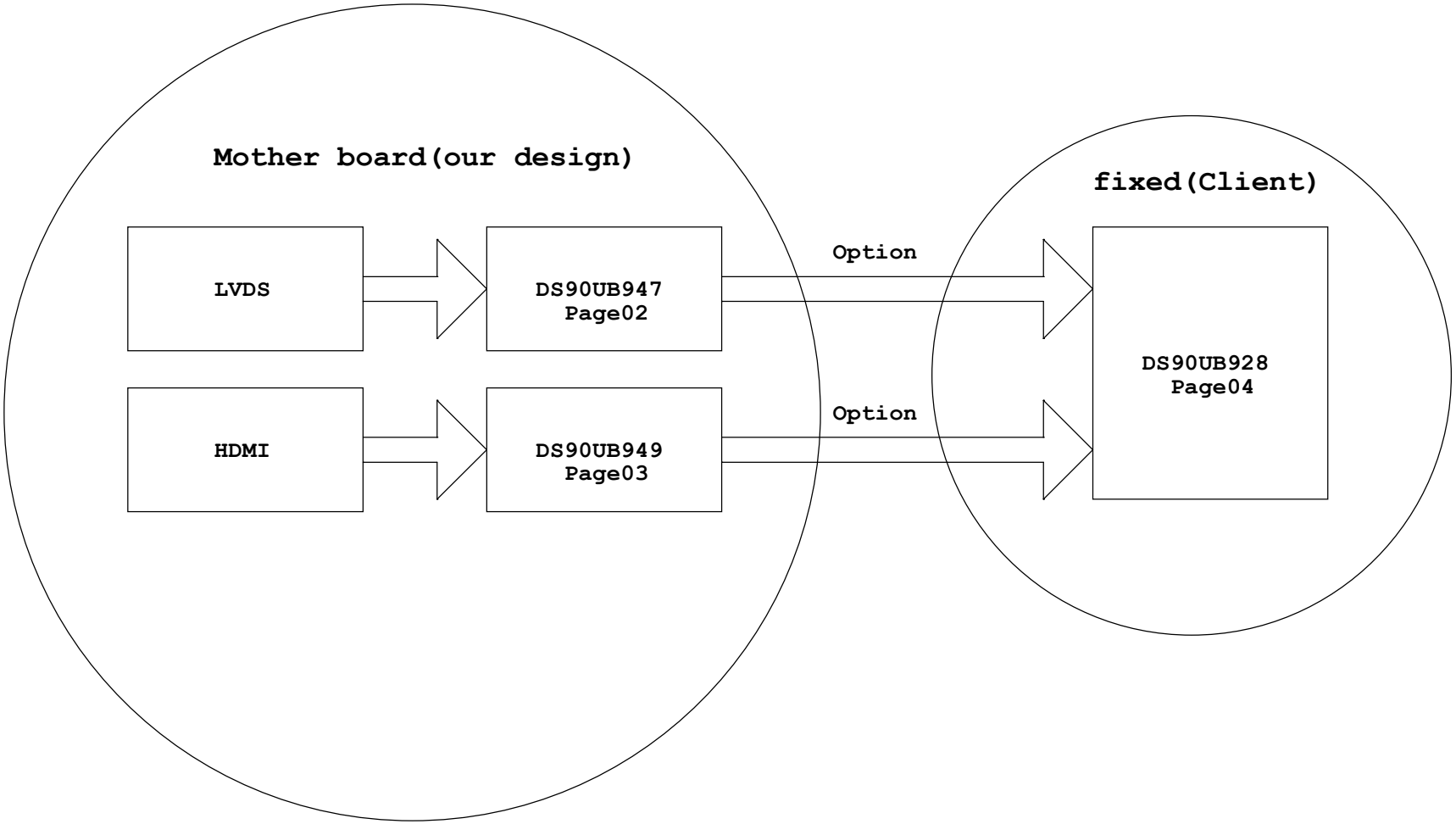

Title <Title>		
Size B	Document Number <Doc>	Rev <RevCode>
Date: Wednesday, December 06, 2023	Sheet 1 of 4	

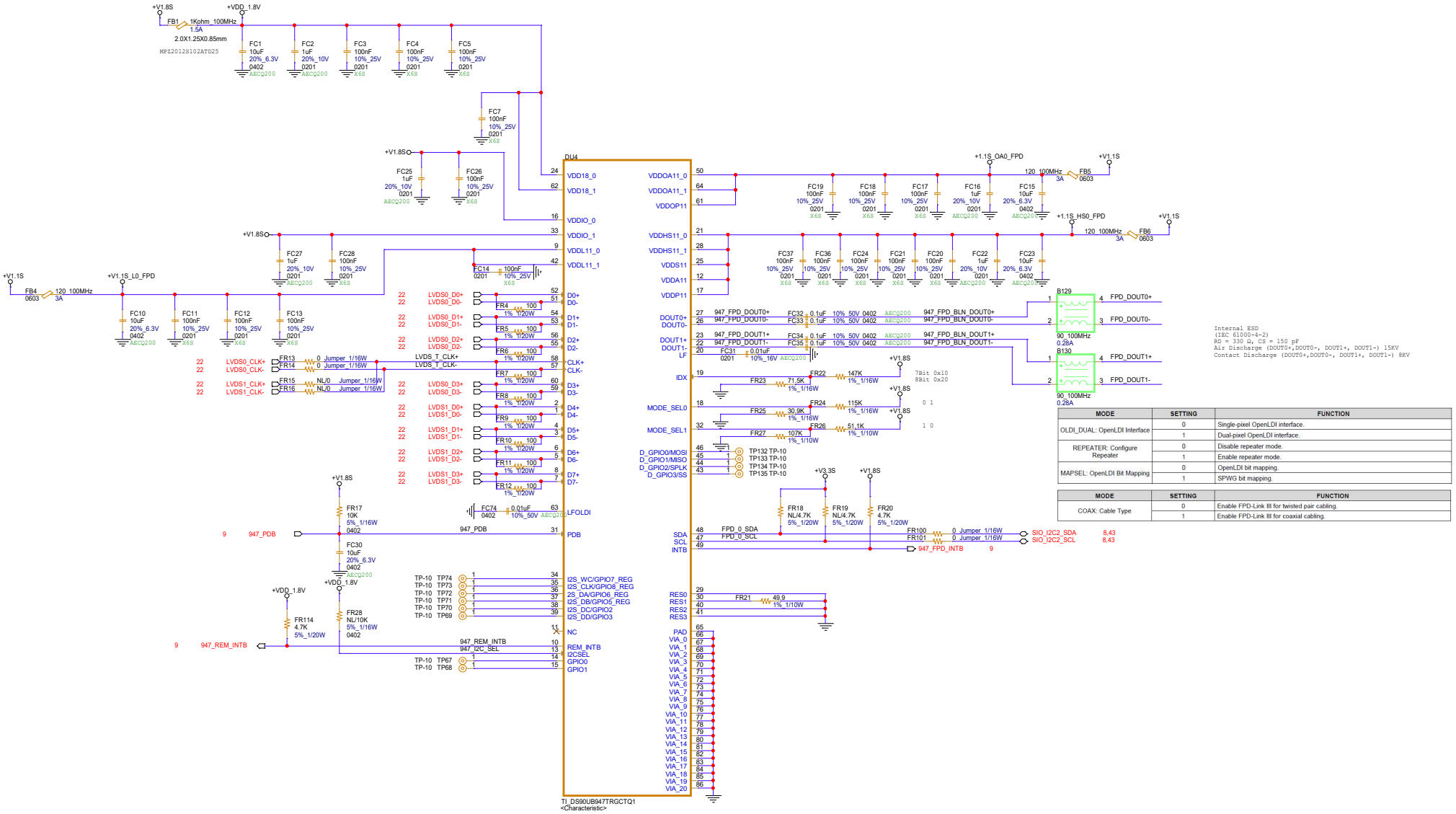

MODE	SETTING	FUNCTION
OLDI_DUAL: OpenLDI Interface	0	Single-pixel OpenLDI interface.
	1	Dual-pixel OpenLDI interface.
REPEATER: Configure Repeater	0	Disable repeater mode.
	1	Enable repeater mode.
MAPSEL: OpenLDI Bit Mapping	0	OpenLDI bit mapping.
	1	SPWG bit mapping.

MODE	SETTING	FUNCTION
COAX: Cable Type	0	Enable FPD-Link III for twisted pair cabling.
	1	Enable FPD-Link III for coaxial cabling.

Title	<Title>	
Size C	Document Number <Doc>	Rev <RevCode>
Date: Wednesday, December 06, 2023	Sheet 2 of 4	

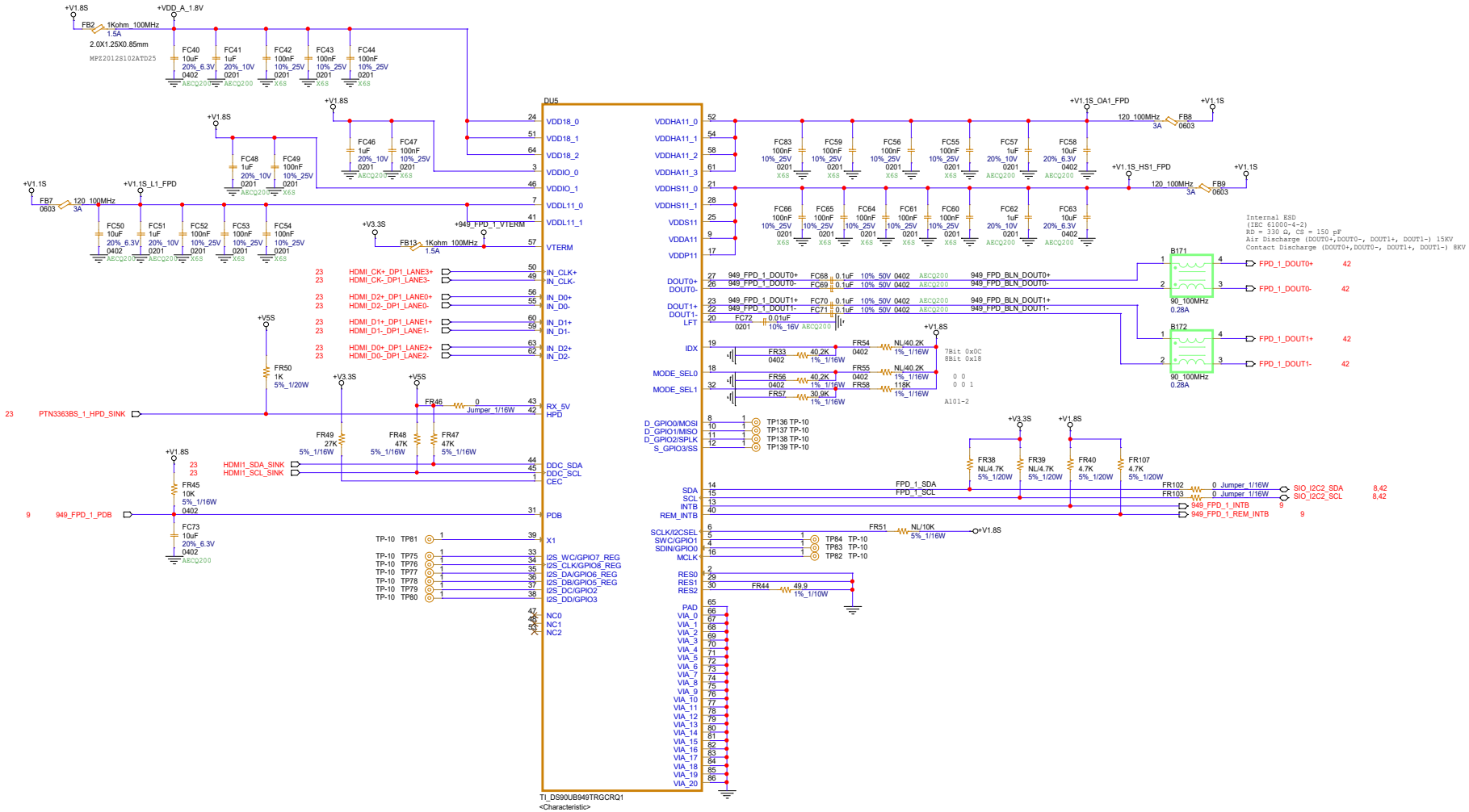

Title	<Title>
Size C	Document Number <Doc>
Rev	<RevCode>
Date: Wednesday, December 06, 2023	Sheet 3 of 4

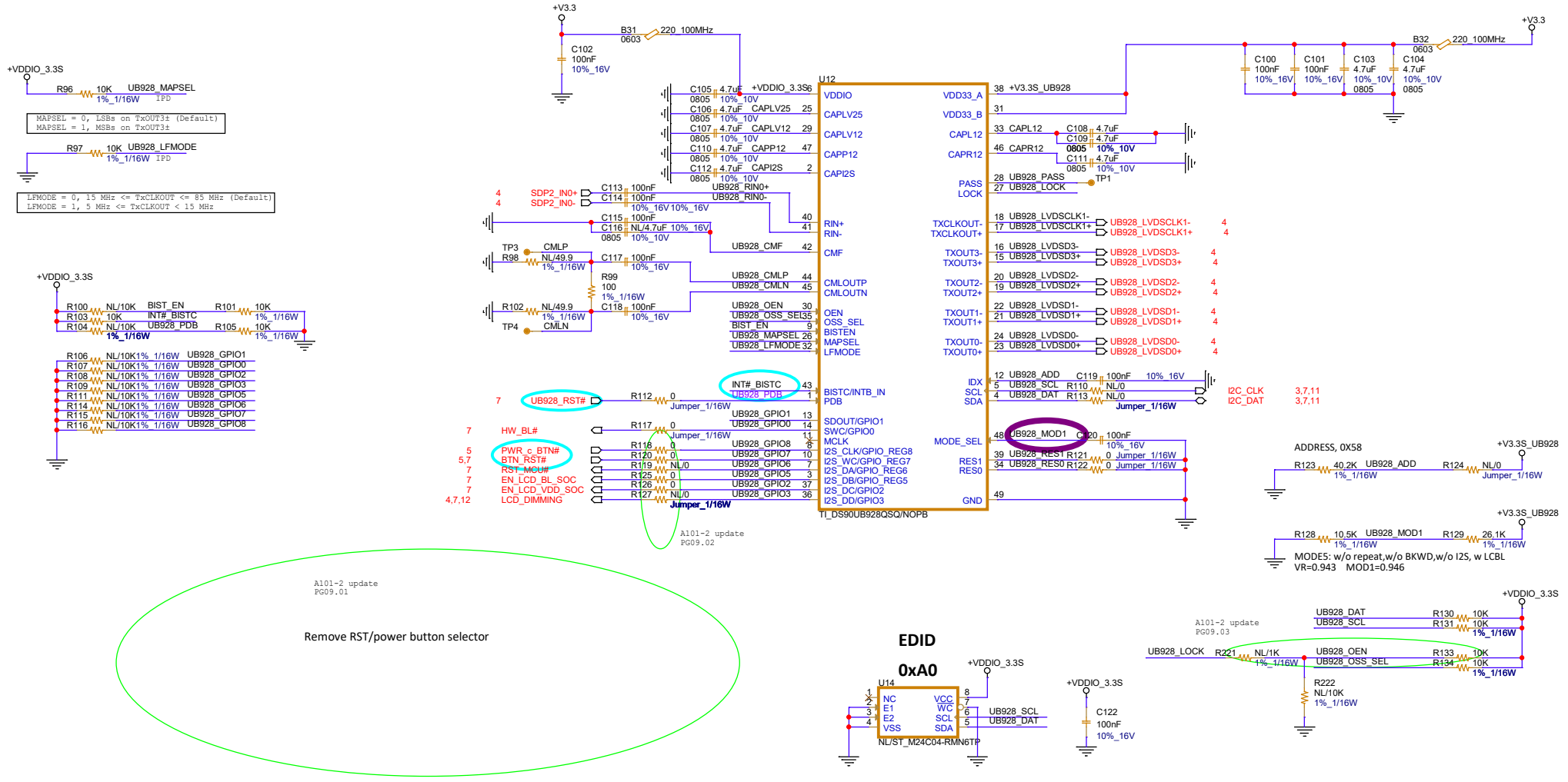

Title	<Title>
Size	Custom
Document Number	<Doc>
Rev	<RevCode>
Date:	Wednesday, December 06, 2023
Sheet	4 of 4