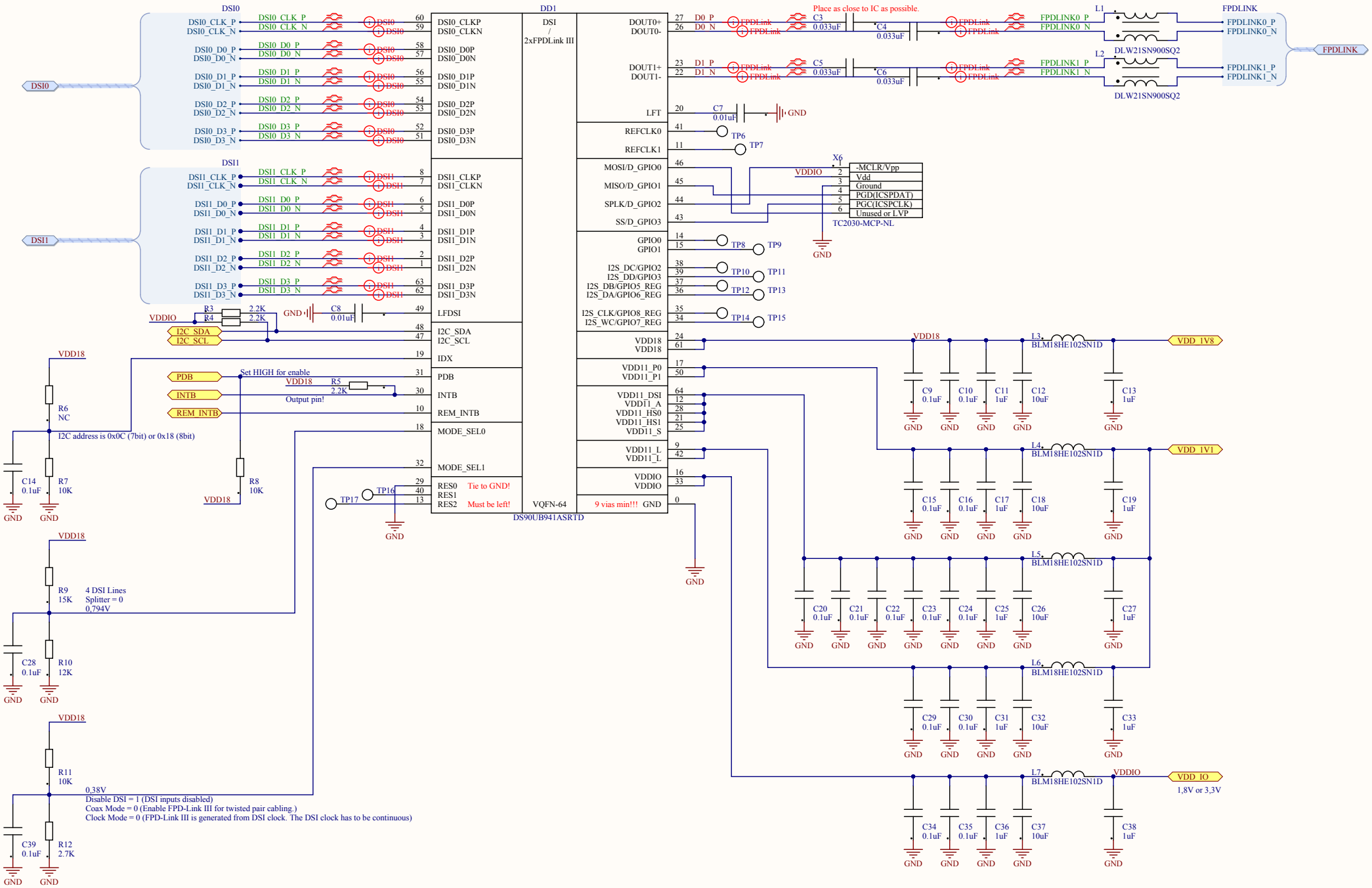FPDLink-III Serializer