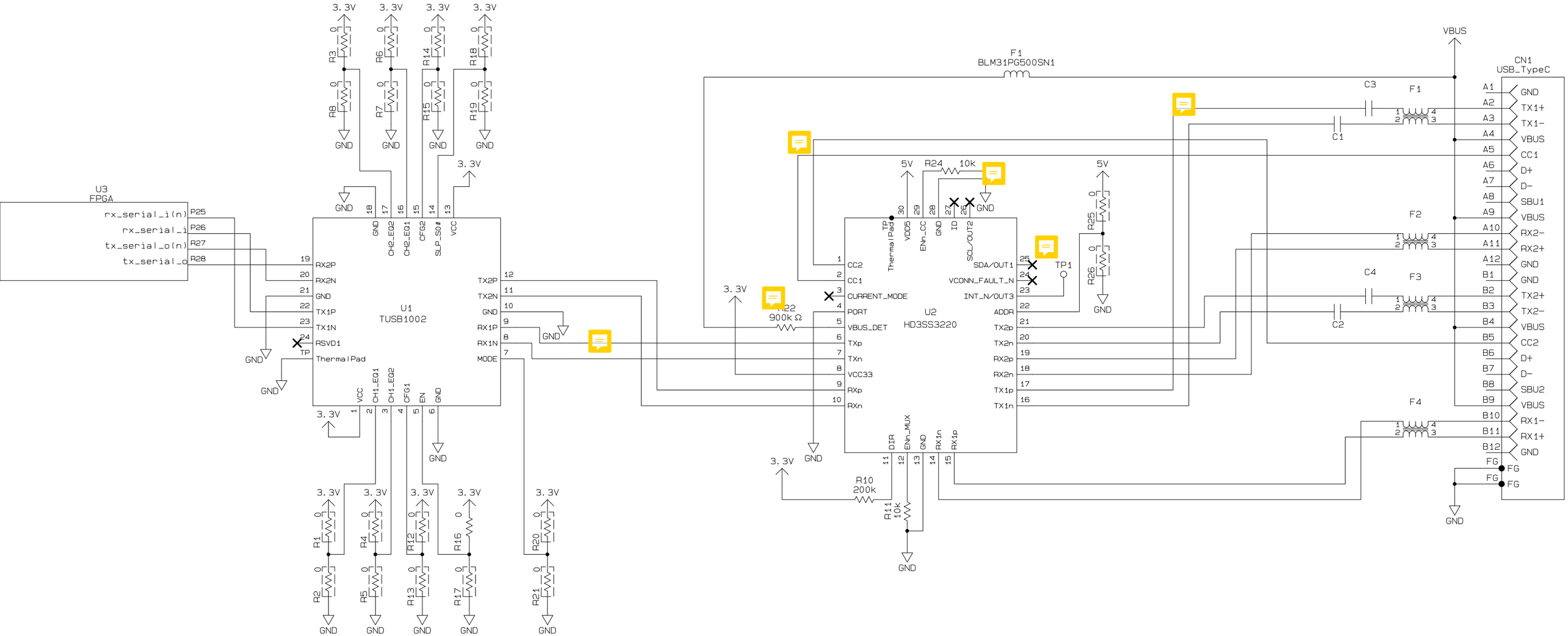

USB Interface