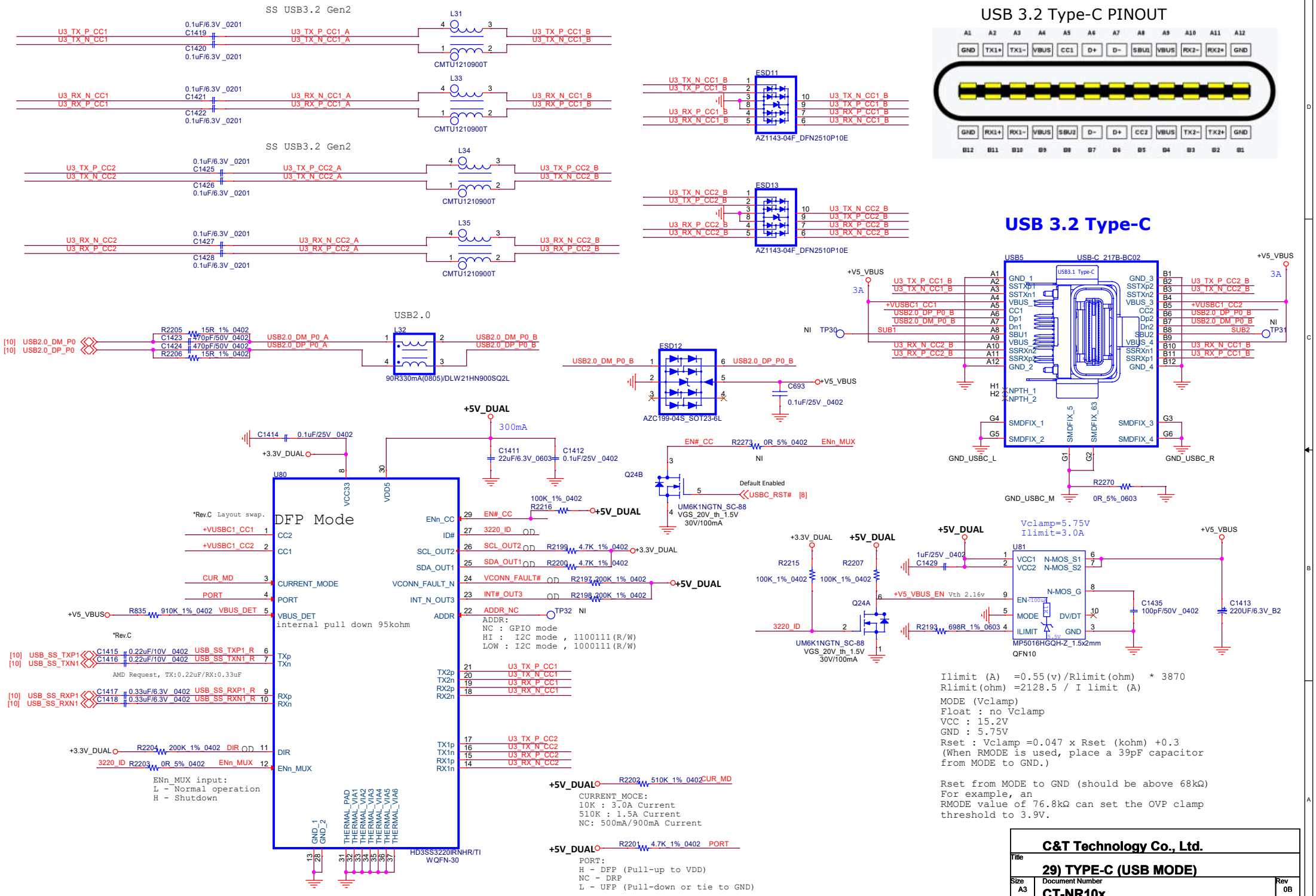
SS USB3.2 Gen2
L31
L33
L34
L35
CMTU1210900T
ESD11
ESD13
AZ1143-04F_DFN2510P10E
USB 3.2 Type-C PINOUT
USB 3.2 Type-C
USB2.0
L32
90R330mA(0805)/DLW21HN900SQ2L
ESD12
AZC199-04S_SOT23-6L
USB5
USB-C_217B-BC02
+V5_VBUS
3A
NI
TP30
TP31
GND_USBC_L
GND_USBC_R
GND_USBC_M
R2270
0R_5%_0603
+5V_DUAL
300mA
U80
DFP Mode
*Rev.C Layout swap.
CURRENT_MODE
PORT
VBUS_DET
internal pull down 95kohm
ADDR:
NC : GPIO mode
HI : I2C mode , 1100111(R/W)
LOW : I2C mode , 1000111(R/W)
*Rev.C
AMD Request, TX:0.22uF/RX:0.33uF
ENn_MUX input:
L - Normal operation
H - Shutdown
HD3SS3220IRNHR/TI
WQFN-30
Q24B
UM6K1NGTN_SC-88
VGS_20V_th_1.5V
30V/100mA
Default Enabled
USBC_RST# [8]
Q24A
U81
MP5016HGQH-Z_1.5x2mm
QFN10
Vclamp=5.75V
Ilimit=3.0A
Ilimit (A) =0.55(v)/Rlimit(ohm) * 3870
Rlimit(ohm) =2128.5 / I limit (A)
MODE (Vclamp)
Float : no Vclamp
VCC : 15.2V
GND : 5.75V
Rset : Vclamp =0.047 x Rset (kohm) +0.3
(When RMODE is used, place a 39pF capacitor
from MODE to GND.)
Rset from MODE to GND (should be above 68kΩ)
For example, an
RMODE value of 76.8kΩ can set the OVP clamp
threshold to 3.9V.
CURRENT_MOCE:
10K : 3.0A Current
510K : 1.5A Current
NC: 500mA/900mA Current
PORT:
H - DFP (Pull-up to VDD)
NC - DRP
L - UFP (Pull-down or tie to GND)
C&T Technology Co., Ltd.
Title
29) TYPE-C (USB MODE)
Size A3
Document Number
CT-NR10x
Rev 0B
Date: Monday, December 13, 2021
Sheet 29 of 29