THIS DOCUMENT AND THE DATA DISCLOSED HEREIN OR HEREWITH IS THE PROPERTY OF ALTIUM LIMITED AND MAY BE FREELY DISTRIBUTED IN WHOLE. NO RIGHTS ARE RESERVED OR EXPRESS OR IMPLIED WARANTEE GIVEN.

REVISION	DESCRIPTION	DATE	APPROVED

HDMI Input3 Interfaace

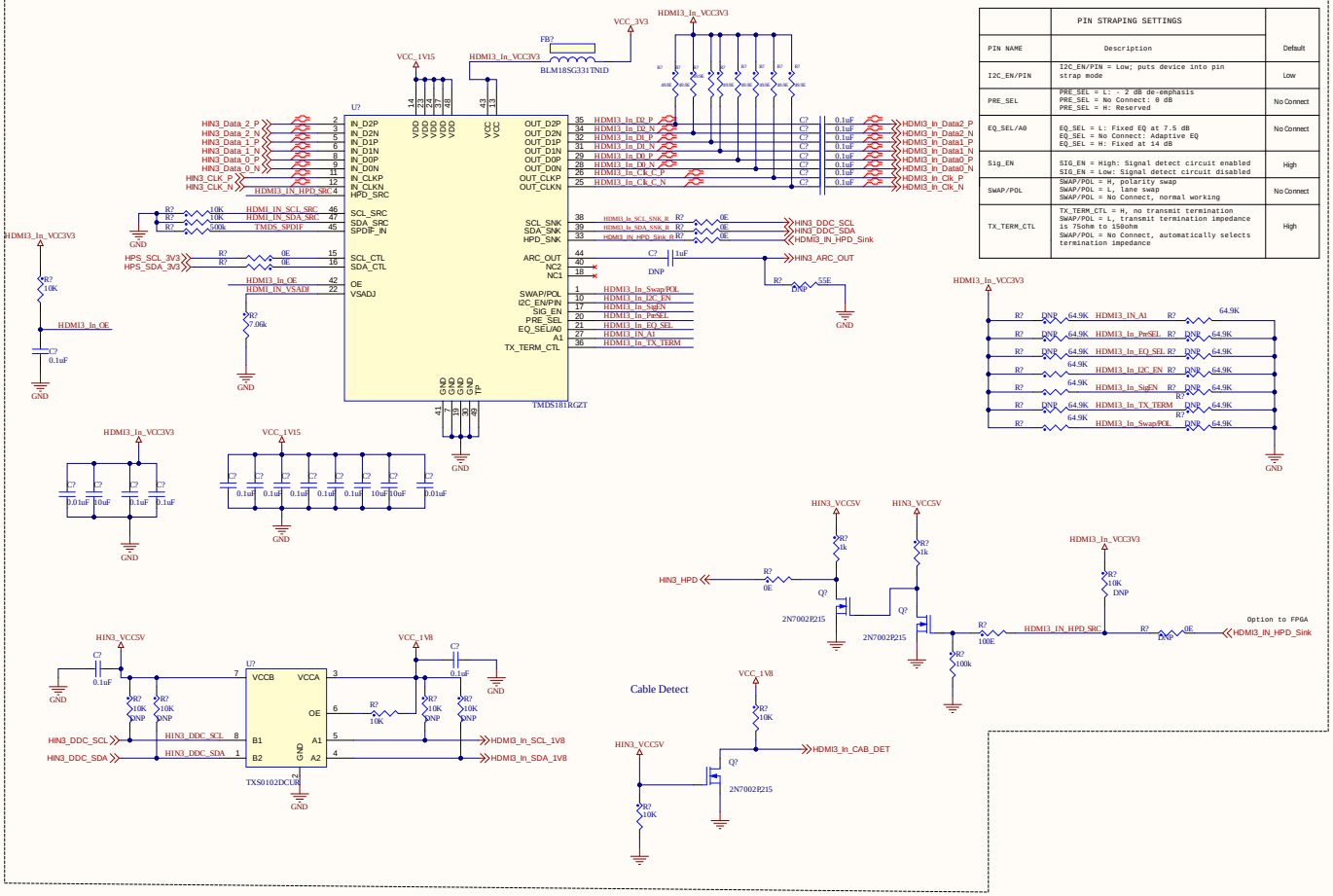

	PIN STRAPING SETTINGS	
PIN NAME	Description	Default
I2C_EN/PIN	I2C_EN/PIN = Low, puts device into pin strap mode	Low
PRE_SEL	PRE_SEL = L: - 2 dB de-emphasis PRE_SEL = No Connect: 0 dB PRE_SEL = H: Reserved	No Connect
EQ_SEL/A0	EQ_SEL = L: Fixed EQ at 7.5 dB EQ_SEL = No Connect: Adaptive EQ EQ_SEL = H: Fixed at 14 dB	No Connect
Sig_EN	SIG_EN = High: Signal detect circuit enabled SIG_EN = Low: Signal detect circuit disabled	High
SWAP/POL	SWAP/POL = H, polarity swap SWAP/POL = L, lane swap SWAP/POL = No Connect, normal working	No Connect
TX_TERM_CTL	TX_TERM_CTL = H, no transmit termination SWAP/POL = L, transmit termination impedance is 75ohm to 150ohm SWAP/POL = No Connect, automatically selects termination impedance	High

HI,

I connected M24C16-DFDW6P in my design for 24V to 5V conversion

APPROVALS	DATE
ENG: -	
DSN: -	
CHK: -	
REFERENCE DOCUMENTS	
BOM:	
ASSY DWG:	
FAB DWG:	
PCB DWG:	

PROJECT

Altum

PROJECT REVISION: Not in version control
DOCUMENT REVISION: Not in version control
DESIGN ITEM: Not in version control

TITLE *

SIZE	CAGE CODE	DWG NO.	REV
C			

SCALE: FILE NAME: HDMI IN.SchDoc SHEET * OF *