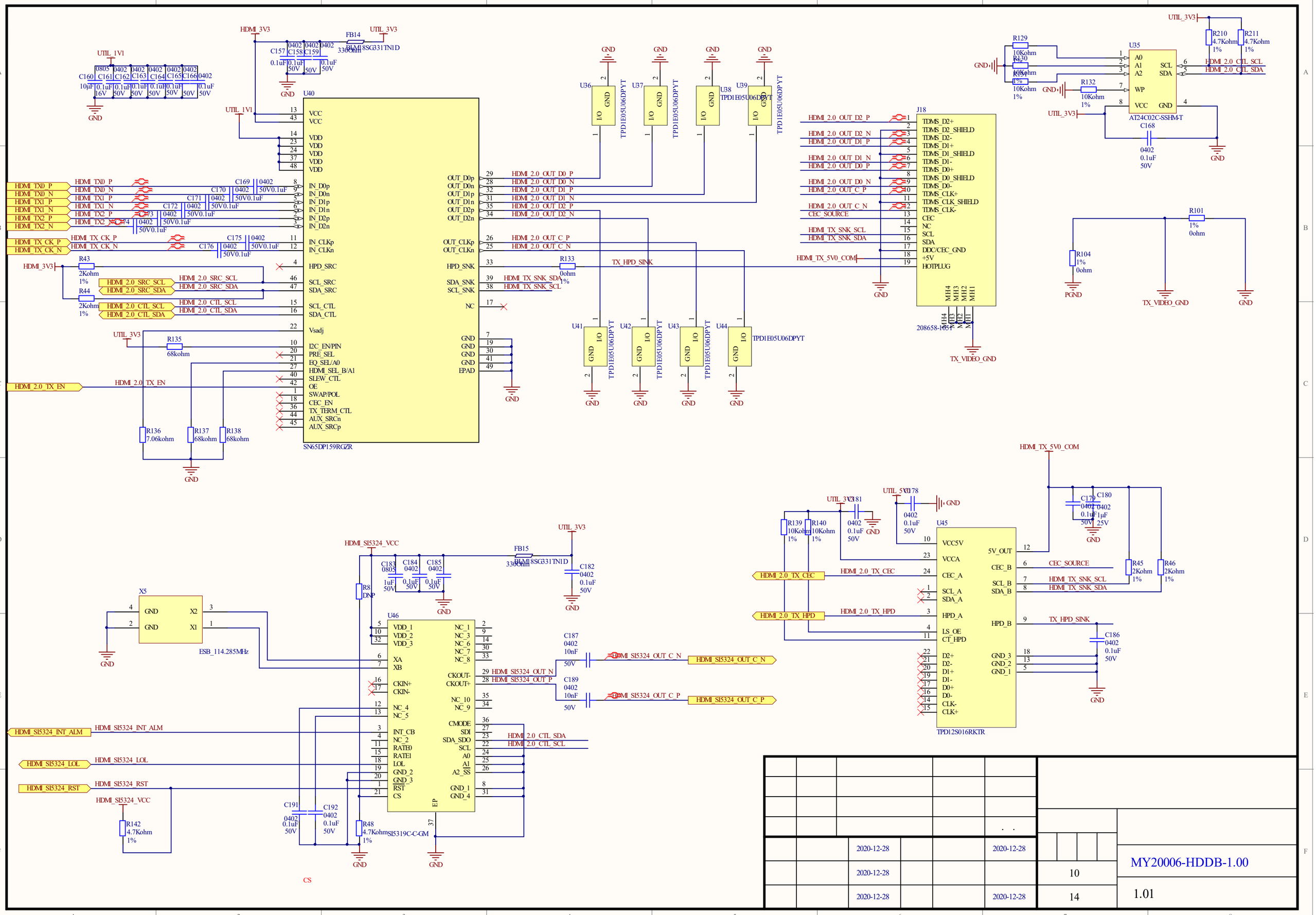
U40
SN65DP159RGZR
U35
AT24C02C-SSHM-T
J18
208658-1051
U45
TPD12S016RKTR
U46
SI5319C-C-GM
X5
ESB_114.285MHz
TPD1E05U06DPYT
HDMI_TX_5V0_COM
TX_HPD_SINK
TX_VIDEO_GND
HDMI_2.0_TX_EN
HDMI_SI5324_INT_ALM
HDMI_SI5324_LOL
HDMI_SI5324_RST
HDMI_SI5324_VCC
HDMI_SI5324_OUT_C_N
HDMI_SI5324_OUT_C_P
CEC_SOURCE
HDMI_TX_SNK_SCL
HDMI_TX_SNK_SDA
HDMI_2.0_TX_CEC
HDMI_2.0_TX_HPD
MY20006-HDDB-1.00
10
14
1.01
2020-12-28