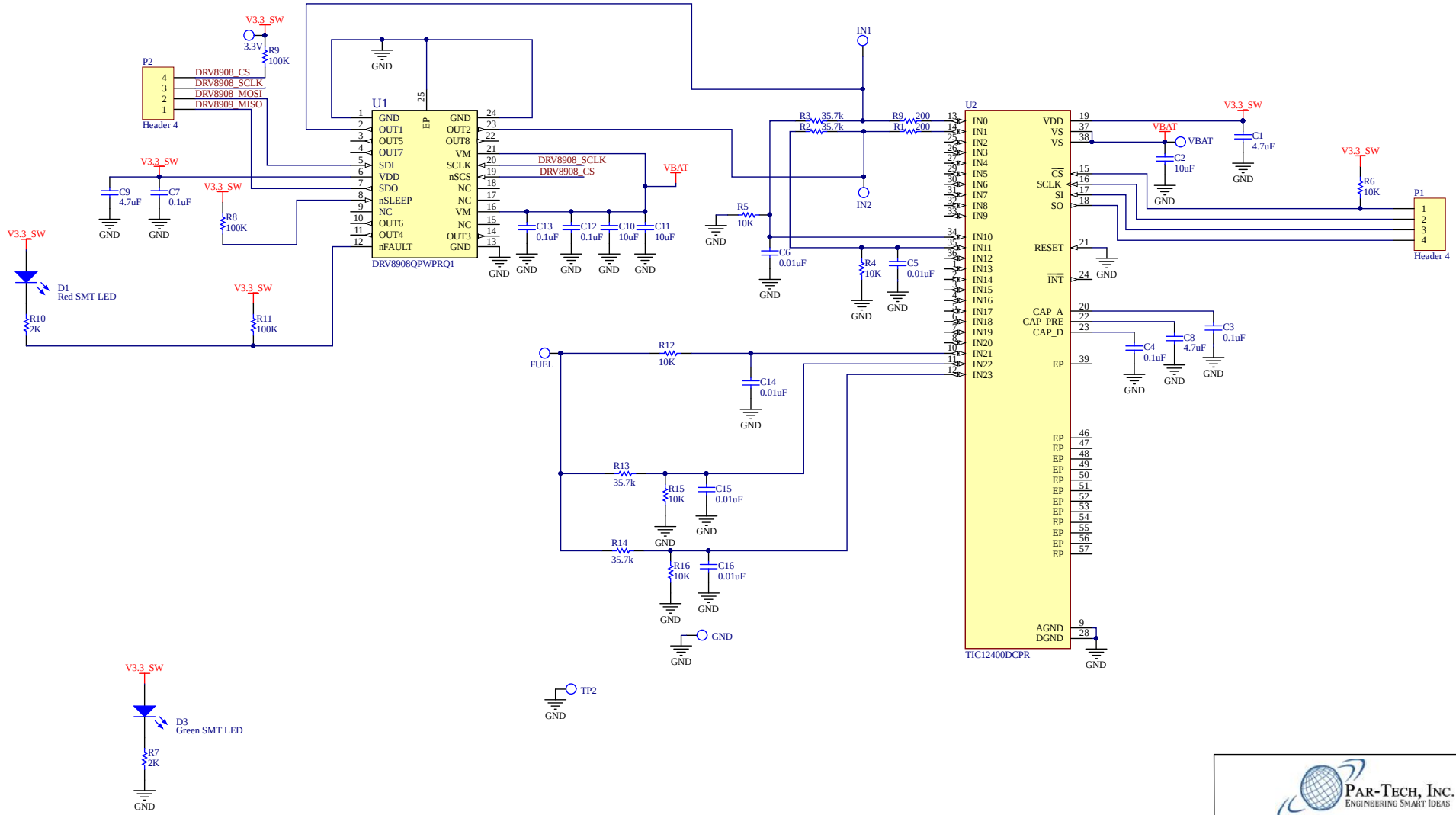

PAR-TECH, INC.
ENGINEERING SMART IDEAS

Title: HS/LS IO Board

Size:	Project:	Date:
B	HS/LS IO Board	12/14/2025
Drawn By: D.R.Eaker	Rev: 1.0	Sheet: 1 of 1

Par-Tech, Inc. 139 Premier Dr. Lake Orion, MI 48359