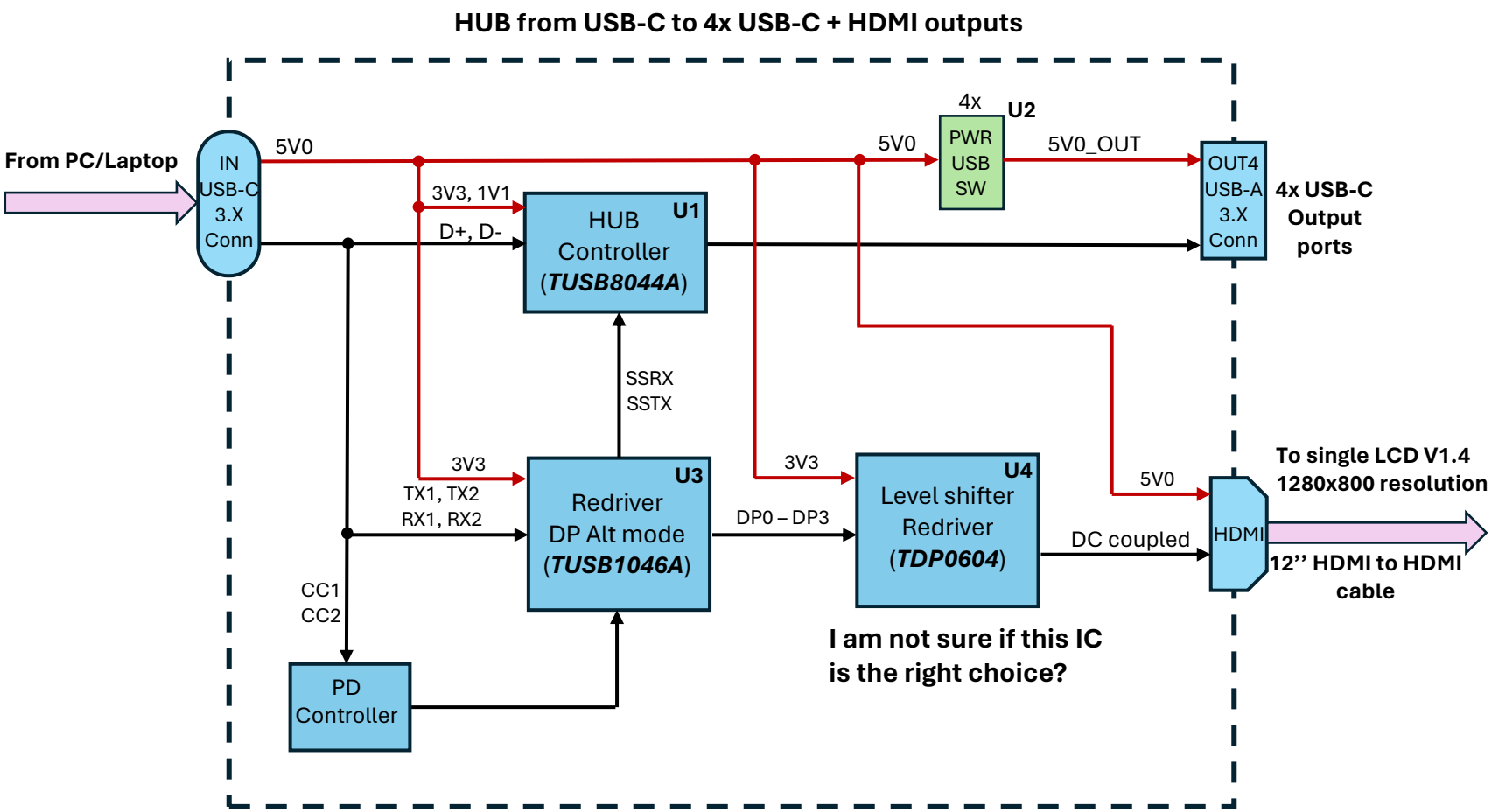
HUB from USB-C to 4x USB-C + HDMI outputs
From PC/Laptop
IN
USB-C
3.X
Conn
5V0
3V3, 1V1
D+, D-
HUB
Controller
(TUSB8044A)
U1
4x
U2
PWR
USB
SW
5V0
5V0_OUT
OUT4
USB-A
3.X
Conn
4x USB-C
Output
ports
SSRX
SSTX
3V3
TX1, TX2
RX1, RX2
U3
Redriver
DP Alt mode
(TUSB1046A)
3V3
DP0 – DP3
U4
Level shifter
Redriver
(TDP0604)
5V0
DC coupled
HDMI
To single LCD V1.4
1280x800 resolution
12'' HDMI to HDMI
cable
CC1
CC2
PD
Controller
I am not sure if this IC
is the right choice?