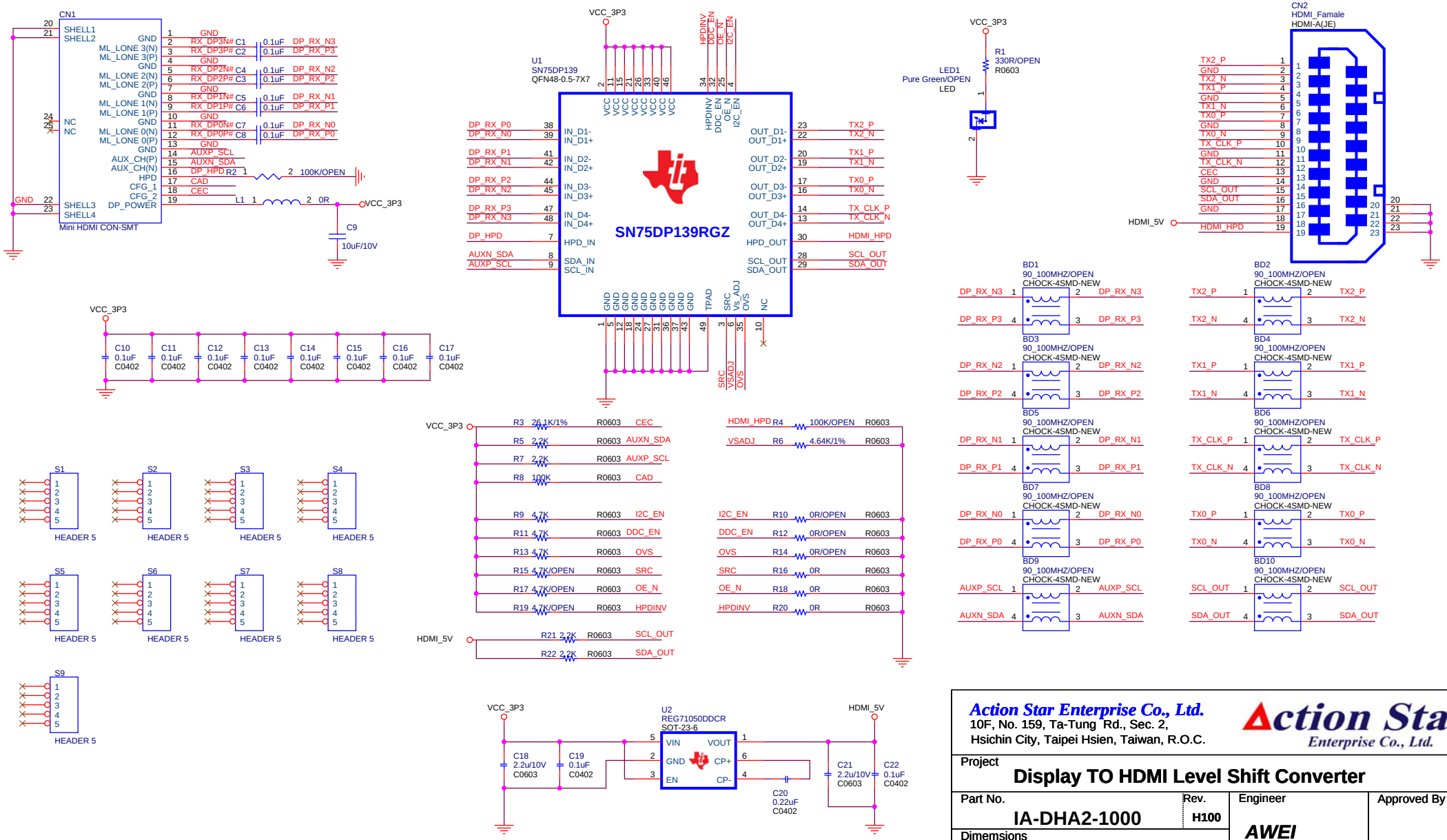

Action Star Enterprise Co., Ltd.
10F, No. 159, Ta-Tung Rd., Sec. 2,
Hsichin City, Taipei Hsien, Taiwan, R.O.C.

Action Star™ Enterprise Co., Ltd.

Project: Display TO HDMI Level Shift Converter			
Part No.: IA-DHA2-1000	Rev.: H100	Engineer: AWEI	Approved By
Dimemsions: Main Schematic			
Date: Wednesday, February 04, 2015		Sheet 3 of 3	