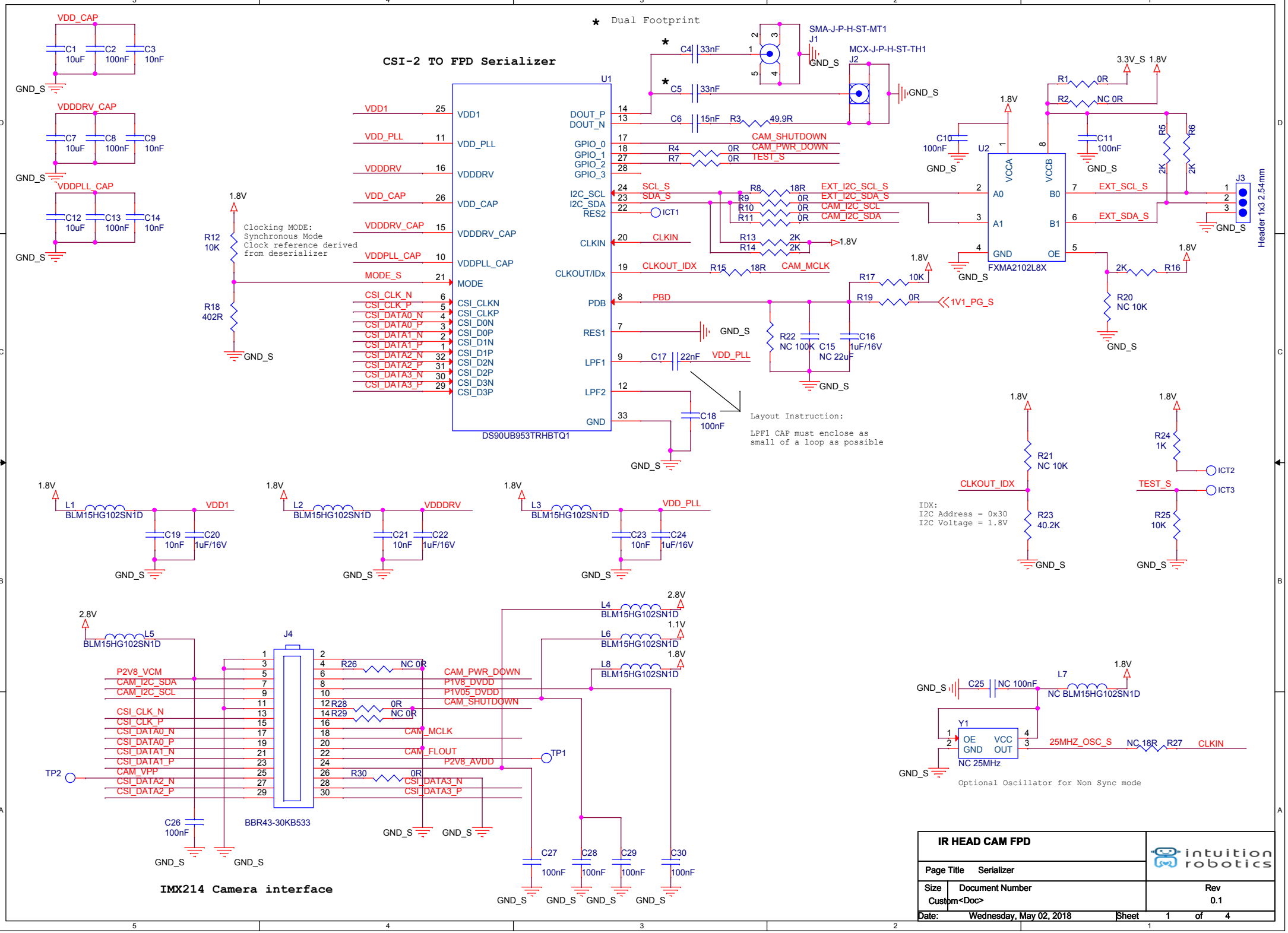
CSI-2 TO FPD Serializer
* Dual Footprint
U1
DS90UB953TRHBTQ1
VDD_CAP
C1 10uF
C2 100nF
C3 10nF
VDDDRV_CAP
C7 10uF
C8 100nF
C9 10nF
VDDPLL_CAP
C12 10uF
C13 100nF
C14 10nF
GND_S
VDD1
VDD_PLL
VDDDRV
VDD_CAP
VDDDRV_CAP
VDDPLL_CAP
MODE_S
MODE
CSI_CLK_N
CSI_CLK_P
CSI_DATA0_N
CSI_DATA0_P
CSI_DATA1_N
CSI_DATA1_P
CSI_DATA2_N
CSI_DATA2_P
CSI_DATA3_N
CSI_DATA3_P
CSI_CLKN
CSI_CLKP
CSI_D0N
CSI_D0P
CSI_D1N
CSI_D1P
CSI_D2N
CSI_D2P
CSI_D3N
CSI_D3P
DOUT_P
DOUT_N
GPIO_0
GPIO_1
GPIO_2
GPIO_3
I2C_SCL
I2C_SDA
RES2
CLKIN
CLKOUT/IDx
PDB
RES1
LPF1
LPF2
GND
1.8V
R12 10K
R18 402R
Clocking MODE:
Synchronous Mode
Clock reference derived
from deserializer
C4 33nF
C5 33nF
C6 15nF
R3 49.9R
SMA-J-P-H-ST-MT1
J1
MCX-J-P-H-ST-TH1
J2
CAM_SHUTDOWN
CAM_PWR_DOWN
TEST_S
R4 0R
R7 0R
SCL_S
SDA_S
ICT1
R8 18R
R9 0R
R10 0R
R11 0R
EXT_I2C_SCL_S
EXT_I2C_SDA_S
CAM_I2C_SCL
CAM_I2C_SDA
R13 2K
R14 2K
CLKIN
CLKOUT_IDX
R15 18R
CAM_MCLK
PBD
R17 10K
R19 0R
1V1_PG_S
R22 NC 100K
C15 NC 22uF
C16 1uF/16V
C17 22nF
VDD_PLL
C18 100nF
Layout Instruction:
LPF1 CAP must enclose as
small of a loop as possible
3.3V_S
R1 0R
R2 NC 0R
C10 100nF
C11 100nF
U2
FXMA2102L8X
VCCA
VCCB
A0
A1
GND
B0
B1
OE
EXT_SCL_S
EXT_SDA_S
R5 2K
R6 2K
J3
Header 1x3 2.54mm
R16 2K
R20 NC 10K
R21 NC 10K
R23 40.2K
IDX:
I2C Address = 0x30
I2C Voltage = 1.8V
R24 1K
R25 10K
ICT2
ICT3
L1 BLM15HG102SN1D
L2 BLM15HG102SN1D
L3 BLM15HG102SN1D
C19 10nF
C20 1uF/16V
C21 10nF
C22 1uF/16V
C23 10nF
C24 1uF/16V
2.8V
L5 BLM15HG102SN1D
L4 BLM15HG102SN1D
1.1V
L6 BLM15HG102SN1D
L8 BLM15HG102SN1D
J4
BBR43-30KB533
P2V8_VCM
CAM_I2C_SDA
CAM_I2C_SCL
CSI_CLK_N
CSI_CLK_P
CSI_DATA0_N
CSI_DATA0_P
CSI_DATA1_N
CSI_DATA1_P
CAM_VPP
CSI_DATA2_N
CSI_DATA2_P
R26 NC 0R
R28 0R
R29 NC 0R
R30 0R
CAM_PWR_DOWN
P1V8_DVDD
P1V05_DVDD
CAM_SHUTDOWN
CAM_MCLK
CAM_FLOUT
P2V8_AVDD
CSI_DATA3_N
CSI_DATA3_P
TP1
TP2
C26 100nF
C27 100nF
C28 100nF
C29 100nF
C30 100nF
IMX214 Camera interface
C25 NC 100nF
L7 NC BLM15HG102SN1D
Y1
OE
VCC
GND
OUT
NC 25MHz
25MHZ_OSC_S
NC 18R
R27
CLKIN
Optional Oscillator for Non Sync mode
IR HEAD CAM FPD
intuition robotics
Page Title Serializer
Size Custom
Document Number <Doc>
Rev 0.1
Date: Wednesday, May 02, 2018
Sheet 1 of 4

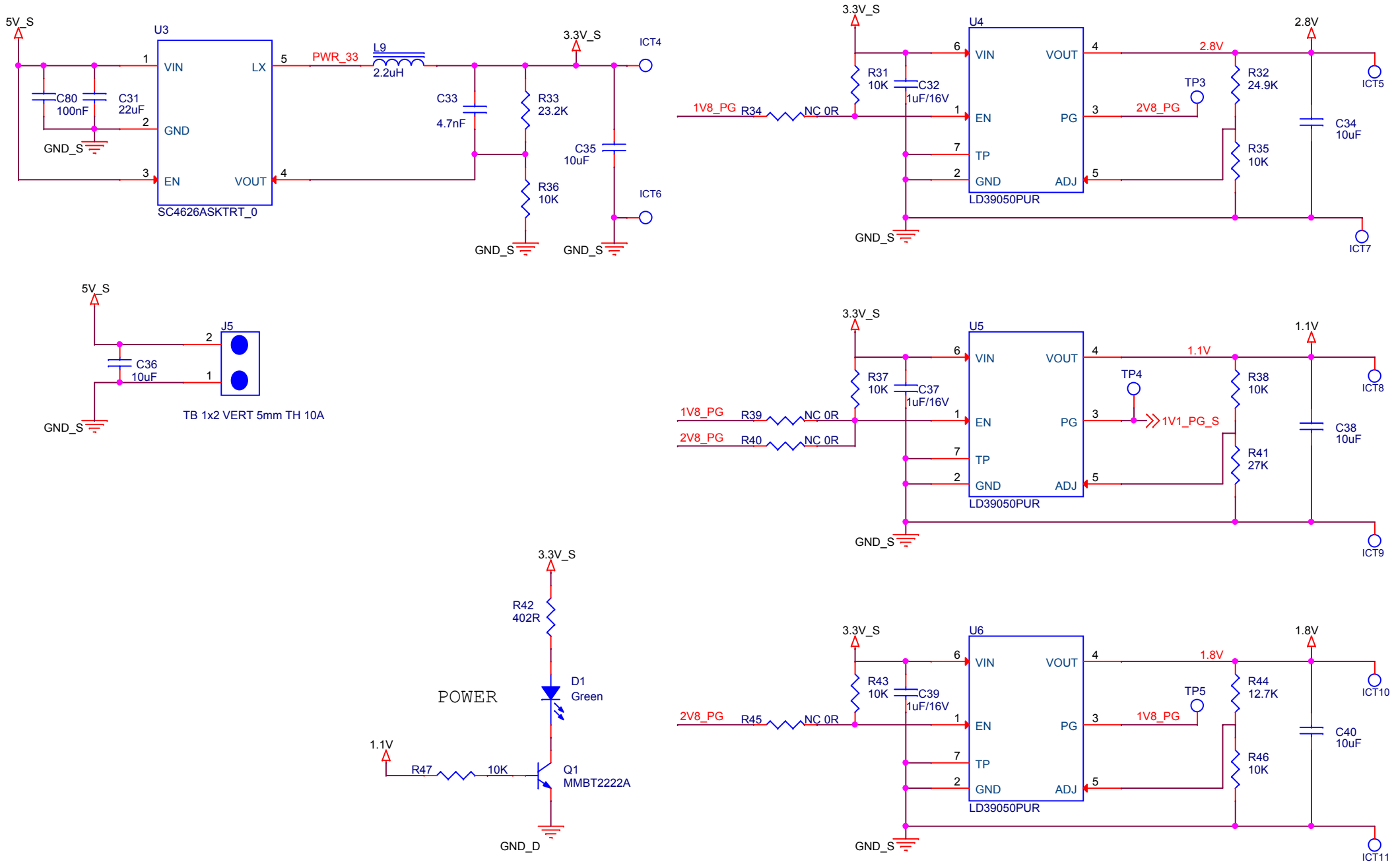

IR HEAD CAM FPD	intuition robotics
Page Title Serializer Power	
Size A4 / Document Number <Doc>	Rev 0.1
Date: Wednesday, May 02, 2018	Sheet 2 of 4

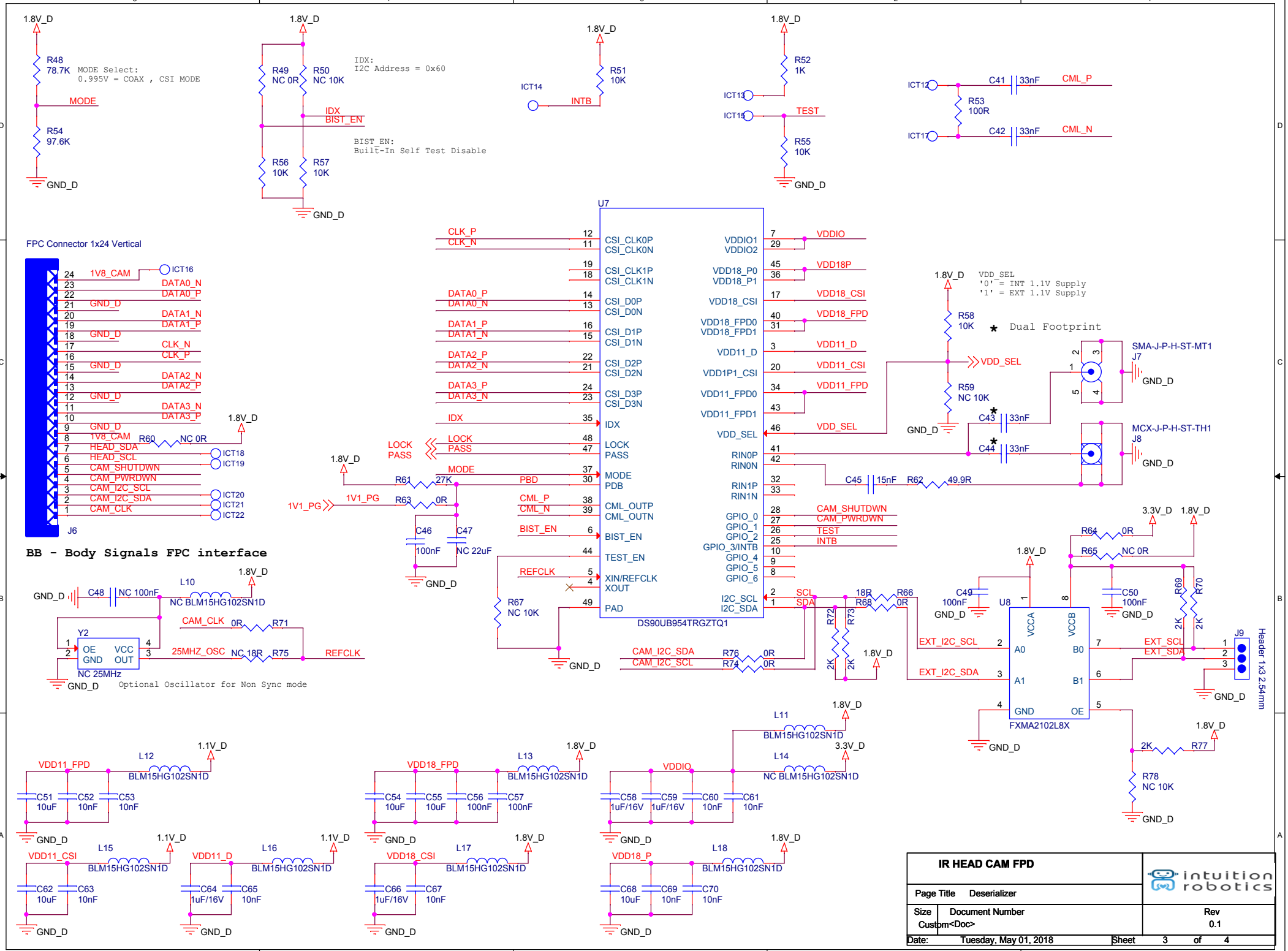
1.8V_D
R48 78.7K
MODE Select:
0.995V = COAX , CSI MODE
MODE
R54 97.6K
GND_D
R49 NC 0R
R50 NC 10K
IDX:
I2C Address = 0x60
IDX
BIST_EN
BIST_EN:
Built-In Self Test Disable
R56 10K
R57 10K
ICT14
INTB
R51 10K
R52 1K
ICT13
ICT15
TEST
R55 10K
ICT12
ICT17
C41 33nF
C42 33nF
R53 100R
CML_P
CML_N
FPC Connector 1x24 Vertical
J6
1V8_CAM
ICT16
DATA0_N
DATA0_P
DATA1_N
DATA1_P
CLK_N
CLK_P
DATA2_N
DATA2_P
DATA3_N
DATA3_P
HEAD_SDA
HEAD_SCL
CAM_SHUTDWN
CAM_PWRDWN
CAM_I2C_SCL
CAM_I2C_SDA
CAM_CLK
ICT18
ICT19
ICT20
ICT21
ICT22
R60 NC 0R
U7
DS90UB954TRGZTQ1
CSI_CLK0P
CSI_CLK0N
CSI_CLK1P
CSI_CLK1N
CSI_D0P
CSI_D0N
CSI_D1P
CSI_D1N
CSI_D2P
CSI_D2N
CSI_D3P
CSI_D3N
IDX
LOCK
PASS
MODE
PDB
CML_OUTP
CML_OUTN
BIST_EN
TEST_EN
XIN/REFCLK
XOUT
PAD
VDDIO1
VDDIO2
VDD18_P0
VDD18_P1
VDD18_CSI
VDD18_FPD0
VDD18_FPD1
VDD11_D
VDD1P1_CSI
VDD11_FPD0
VDD11_FPD1
VDD_SEL
RIN0P
RIN0N
RIN1P
RIN1N
GPIO_0
GPIO_1
GPIO_2
GPIO_3/INTB
GPIO_4
GPIO_5
GPIO_6
I2C_SCL
I2C_SDA
VDDIO
VDD18P
VDD18_CSI
VDD18_FPD
VDD11_D
VDD11_CSI
VDD11_FPD
VDD_SEL
CAM_SHUTDWN
CAM_PWRDWN
TEST
INTB
SCL
SDA
VDD_SEL
'0' = INT 1.1V Supply
'1' = EXT 1.1V Supply
R58 10K
R59 NC 10K
Dual Footprint
SMA-J-P-H-ST-MT1
J7
MCX-J-P-H-ST-TH1
J8
C43 33nF
C44 33nF
C45 15nF
R62 49.9R
LOCK
PASS
MODE
PBD
CML_P
CML_N
BIST_EN
REFCLK
1V1_PG
R61 27K
R63 0R
C46 100nF
C47 NC 22uF
R67 NC 10K
BB - Body Signals FPC interface
C48 NC 100nF
L10 NC BLM15HG102SN1D
Y2
OE
GND
VCC
OUT
NC 25MHz
CAM_CLK
0R
R71
25MHZ_OSC
NC 18R
R75
REFCLK
Optional Oscillator for Non Sync mode
CAM_I2C_SDA
CAM_I2C_SCL
R76 0R
R74 0R
R72 2K
R73 2K
R66 0R
R68 18R
EXT_I2C_SCL
EXT_I2C_SDA
C49 100nF
U8
FXMA2102L8X
VCCA
VCCB
A0
A1
B0
B1
GND
OE
C50 100nF
R69 2K
R70 2K
R64 0R
R65 NC 0R
3.3V_D
J9
Header 1x3 2.54mm
EXT_SCL
EXT_SDA
R77 2K
R78 NC 10K
L11 BLM15HG102SN1D
L12 BLM15HG102SN1D
L13 BLM15HG102SN1D
L14 NC BLM15HG102SN1D
L15 BLM15HG102SN1D
L16 BLM15HG102SN1D
L17 BLM15HG102SN1D
L18 BLM15HG102SN1D
1.1V_D
VDD11_FPD
VDD18_FPD
VDDIO
VDD11_CSI
VDD11_D
VDD18_CSI
VDD18_P
C51 10uF
C52 10nF
C53 10nF
C54 10uF
C55 10uF
C56 100nF
C57 100nF
C58 1uF/16V
C59 1uF/16V
C60 10nF
C61 10nF
C62 10uF
C63 10nF
C64 1uF/16V
C65 10nF
C66 1uF/16V
C67 10nF
C68 10uF
C69 10nF
C70 10nF
IR HEAD CAM FPD
Page Title Deserializer
Size Custom
Document Number <Doc>
Rev 0.1
Date: Tuesday, May 01, 2018
Sheet 3 of 4
intuition robotics

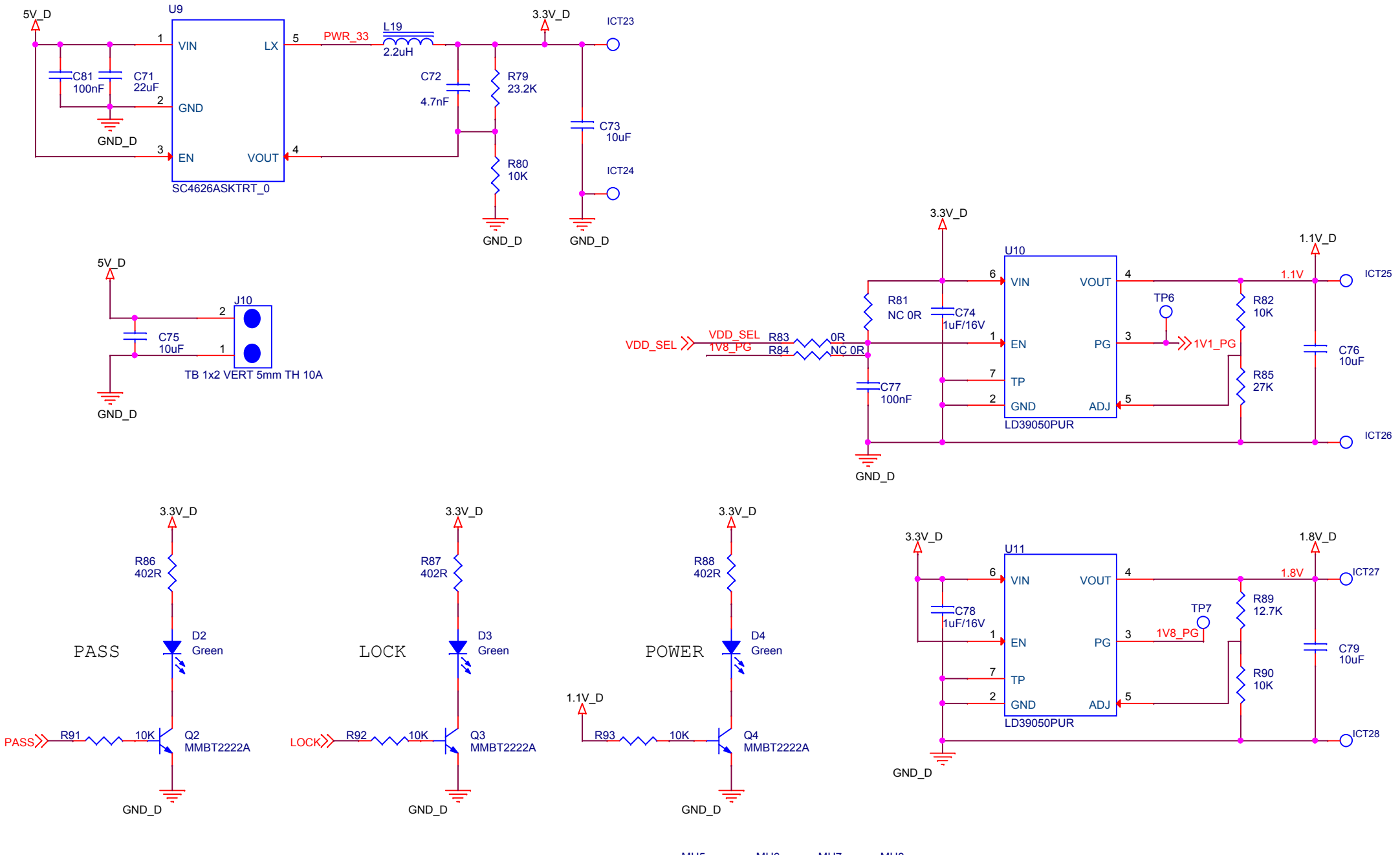

IR HEAD CAM FPD		intuition robotics
Page Title Deserializer Power		
Size A4	Document Number <Doc>	Rev 0.1
Date: Wednesday, May 02, 2018	Sheet 4 of 4	