Ethernet I/F

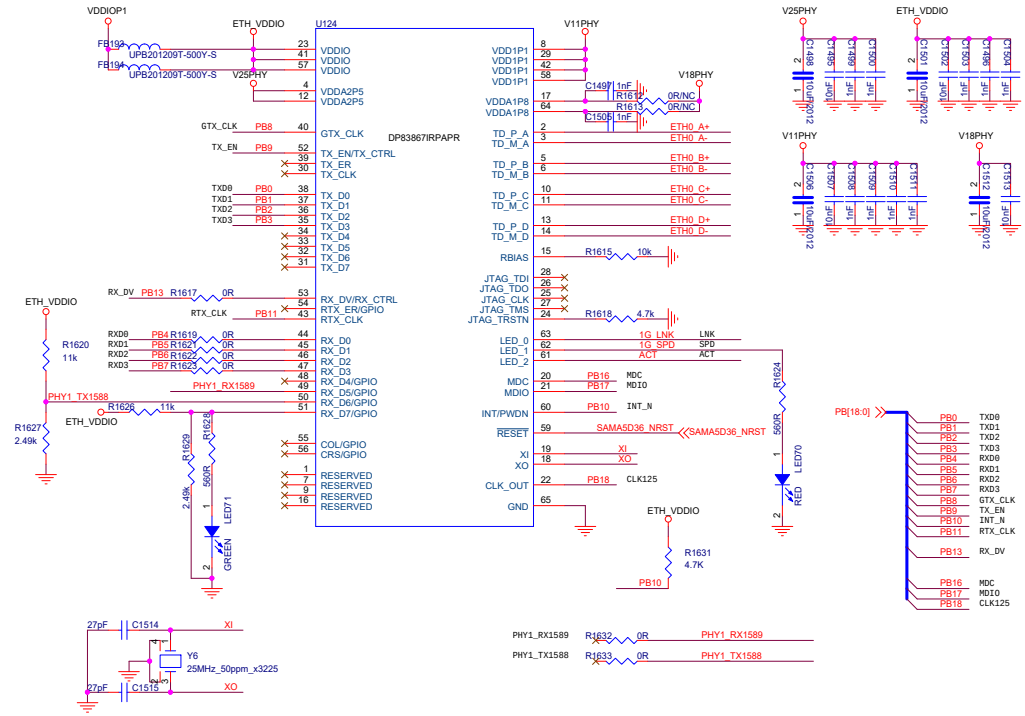

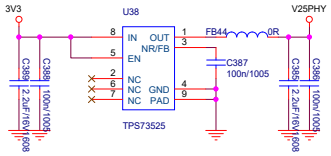

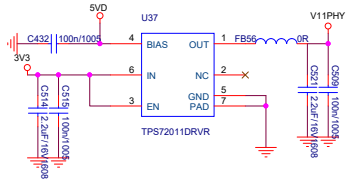

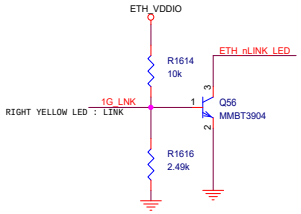

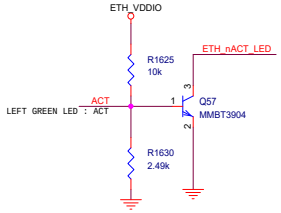

1G Ethernet I/F

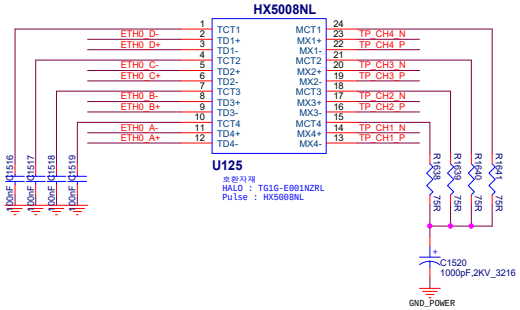

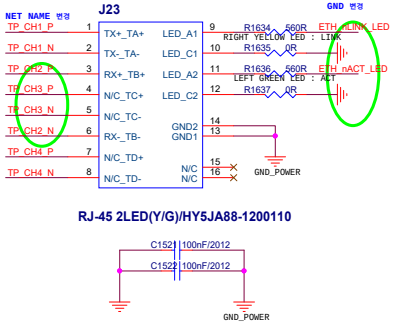

Sync Input

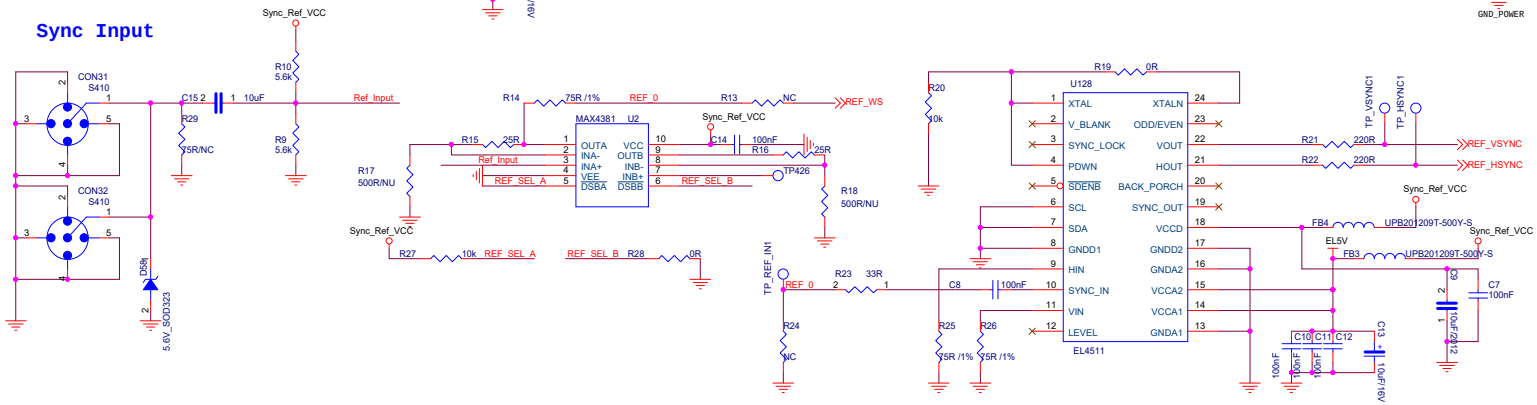

Title	ULM-1264P-12G	
Size C	Document Number 16: EHTERNET-PHY_RS-422	Rev 1.0
Date: Monday, January 28, 2019	Sheet 17 of 20	