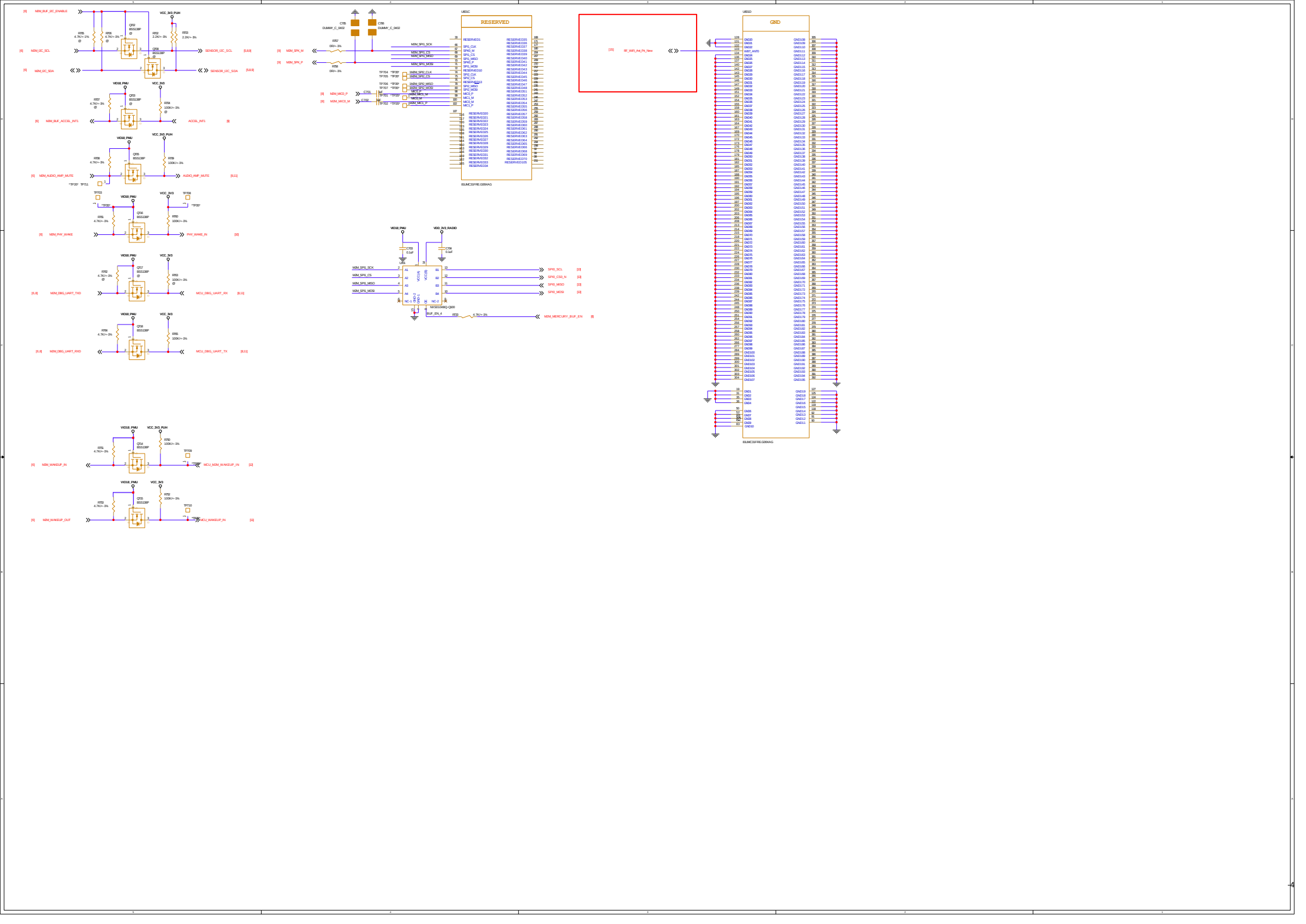
RESERVED
GND
U803C
U803D
81UMC31FRE.G99KAG
VCC_3V3 PUH
VCC_3V3
VDD18 PMU
VDD_3V3 RADIO
MDM_BUF_I2C_ENABLE
MDM_I2C_SCL
MDM_I2C_SDA
SENSOR_I2C_SCL
SENSOR_I2C_SDA
MDM_BUF_ACCEL_INT1
ACCEL_INT1
MDM_AUDIO_AMP_MUTE
AUDIO_AMP_MUTE
MDM_PMV_WAKE
PMV_WAKE_IN
MDM_DBG_UART_TXD
MCU_DBG_UART_RX
MDM_DBG_UART_RXD
MCU_DBG_UART_TX
MDM_WAKEUP_IN
MCU_MDM_WAKEUP_IN
MDM_WAKEUP_OUT
MCU_WAKEUP_IN
MDM_SPK_M
MDM_SPK_P
MDM_MIC0_P
MDM_MIC0_M
MDM_SPI1_SCK
MDM_SPI1_CS
MDM_SPI1_MISO
MDM_SPI1_MOSI
MDM_SPI2_CLK
MDM_SPI2_CS
MDM_SPI2_MISO
MDM_SPI2_MOSI
SPI0_SCL
SPI0_CS0_N
SPI0_MISO
SPI0_MOSI
MDM_MERCURY_BUF_EN
RF_WIFI_Ant_Pri_New
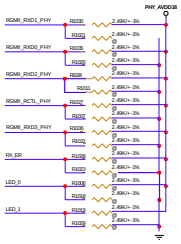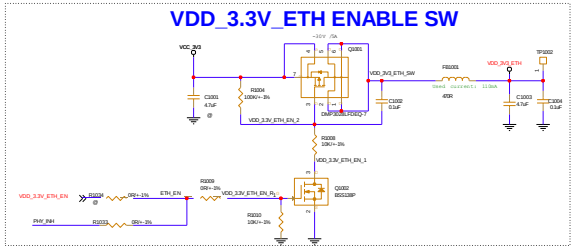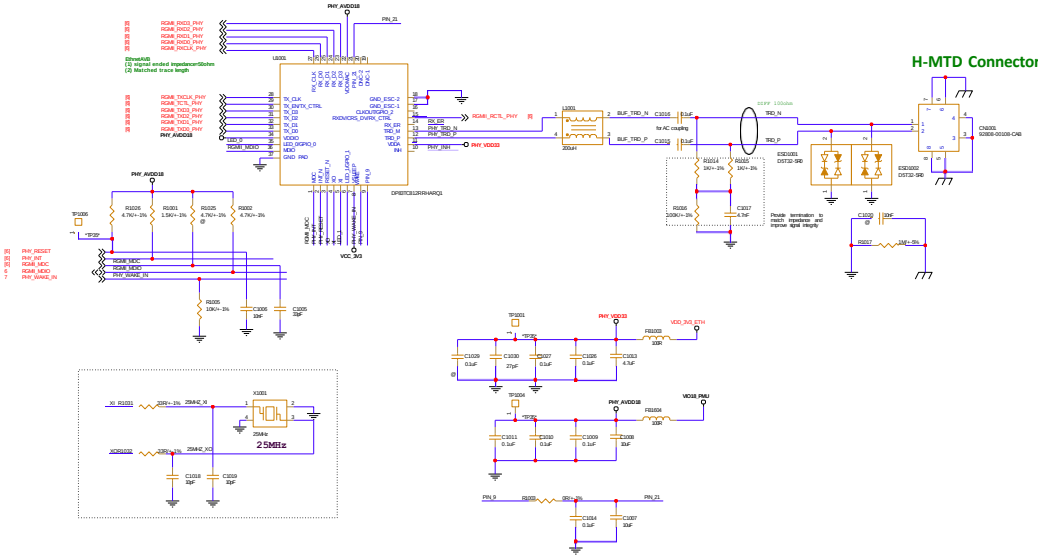
Hardware Configuration		Bootstrap Pin	Bootstrap Pin Number	Bootstrap Mode	Suggested Pull-Up (R_U)	Suggested Pull-down (R_D)
MAC Interface	RGMII (TX + RX Internal Delay)	RX_D0	26	Mode 1	OPEN	OPEN
		RX_D1	25	Mode 2	2.49kΩ	OPEN
		RX_D2	24	Mode 3	2.49kΩ	OPEN
M/S Configuration	Slave	LED_0	35	Mode 1	OPEN	OPEN
Operational Mode	Autonomous	LED_1	6	Mode 1	OPEN	OPEN
CLKOUT_PIN	CLKOUT=Pin16	RX_D0	23	Mode 1	OPEN	OPEN
PHY Address (0x0-0xF)	0x0	RX_DV	15	Mode 1	OPEN	OPEN
		RX_ER	14	Mode 1	OPEN	OPEN
VDDIO	1.8V