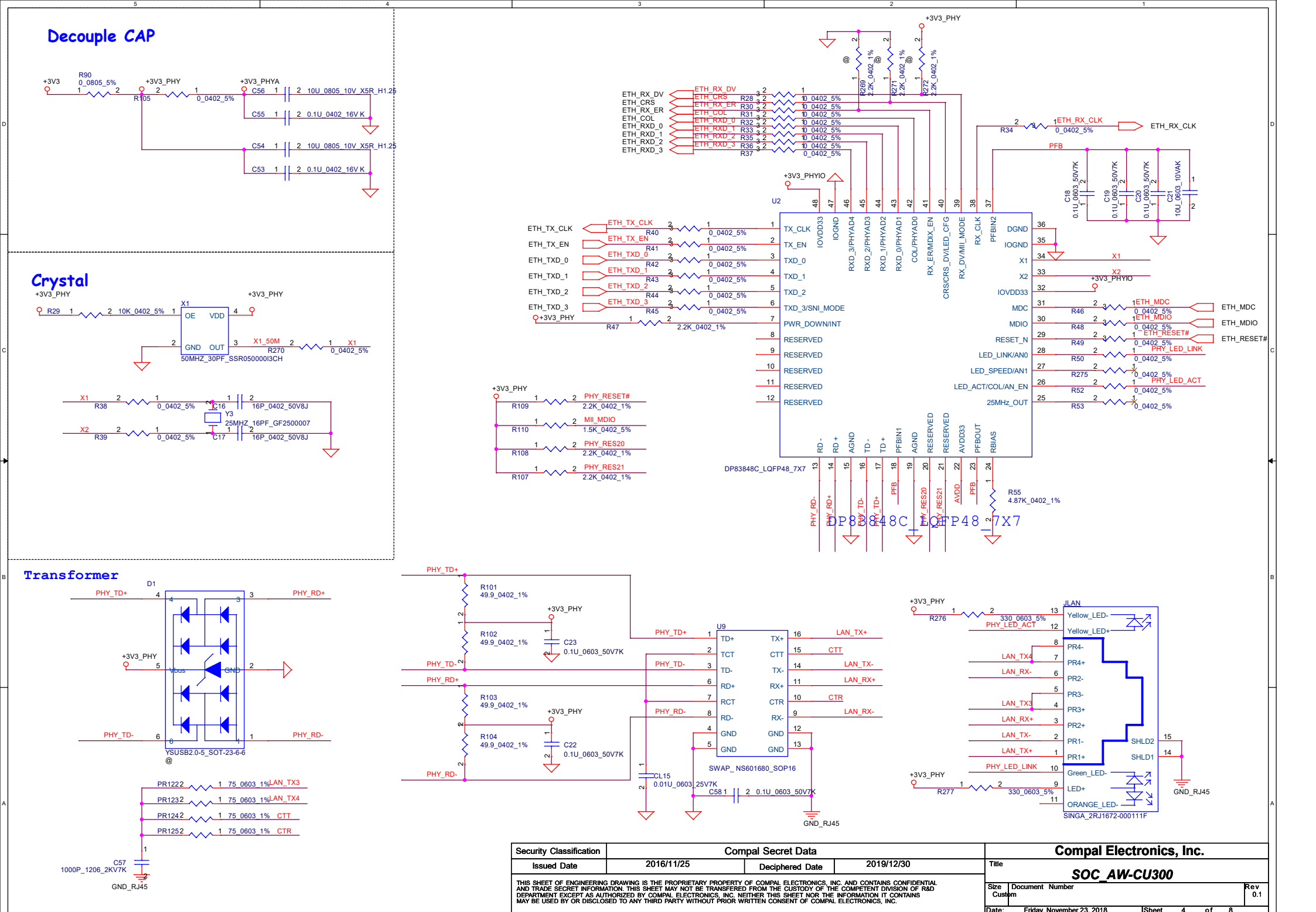
Decouple CAP
Crystal
Transformer
DP83848C_LQFP48_7X7
U2
U9
JLAN
SINGA_2RJ1672-000111F
SWAP_ NS601680_SOP16
YSUSB2.0-5_SOT-23-6-6
50MHZ_30PF_SSR050000I3CH
25MHZ_16PF_GF2500007
GND_RJ45
Security Classification
Compal Secret Data
Issued Date
2016/11/25
Deciphered Date
2019/12/30
THIS SHEET OF ENGINEERING DRAWING IS THE PROPRIETARY PROPERTY OF COMPAL ELECTRONICS, INC. AND CONTAINS CONFIDENTIAL AND TRADE SECRET INFORMATION. THIS SHEET MAY NOT BE TRANSFERED FROM THE CUSTODY OF THE COMPETENT DIVISION OF R&D DEPARTMENT EXCEPT AS AUTHORIZED BY COMPAL ELECTRONICS, INC. NEITHER THIS SHEET NOR THE INFORMATION IT CONTAINS MAY BE USED BY OR DISCLOSED TO ANY THIRD PARTY WITHOUT PRIOR WRITTEN CONSENT OF COMPAL ELECTRONICS, INC.
Compal Electronics, Inc.
Title
SOC_AW-CU300
Size
Custom
Document Number
Rev
0.1
Date:
Friday, November 23, 2018
Sheet
4
of
8