EDP

SN65DSI86ZXHR_POWER

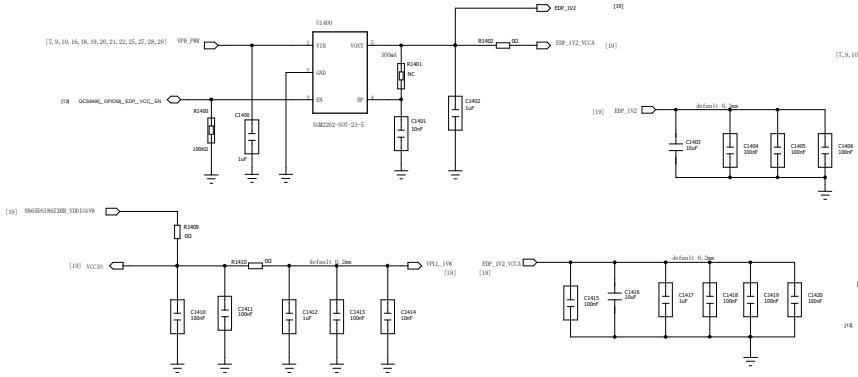

SN65DSI86ZXHR_VDDIO1V8

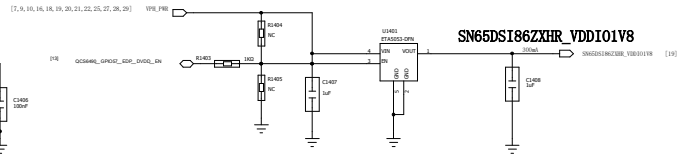

EDP/LVDS_PWM_OUT

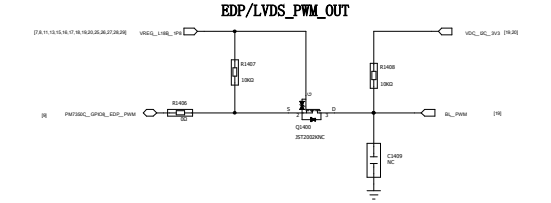

EDP_LCD_3V3

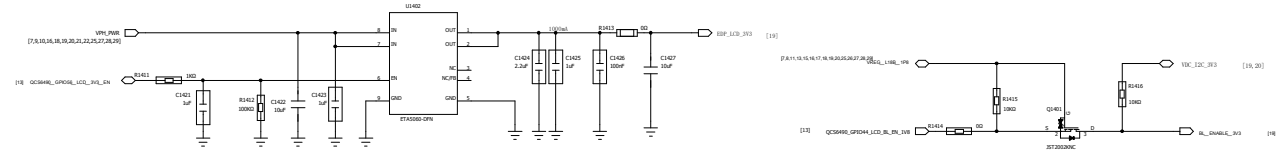

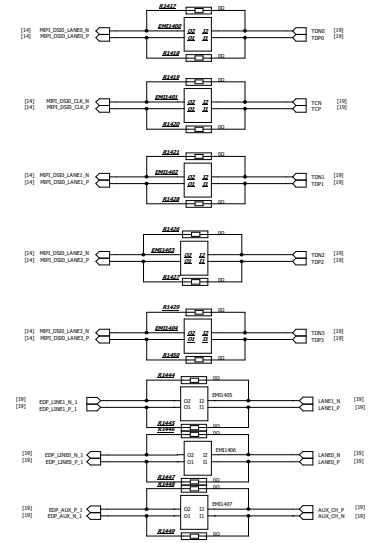

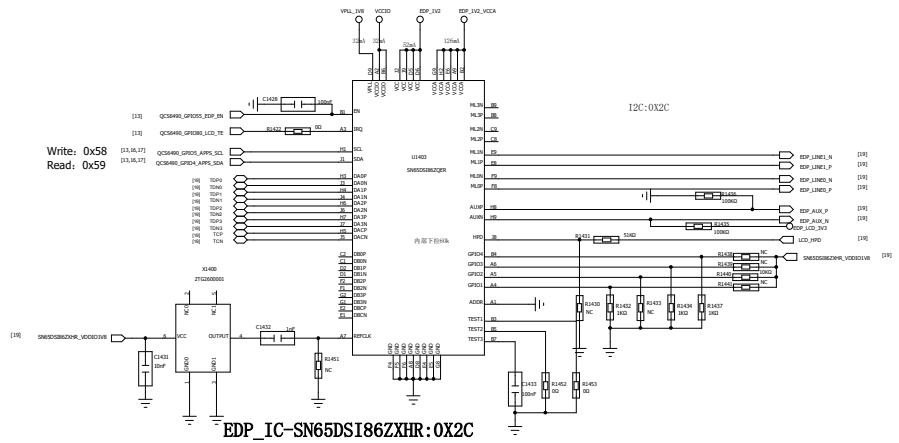

EDP_IC-SN65DSI86ZXHR:0X2C

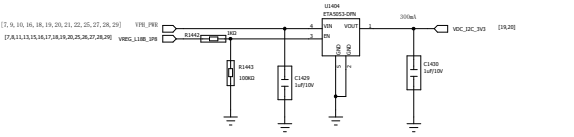

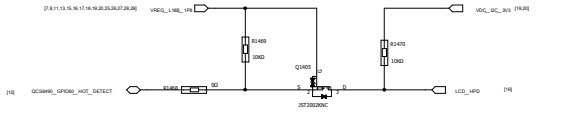

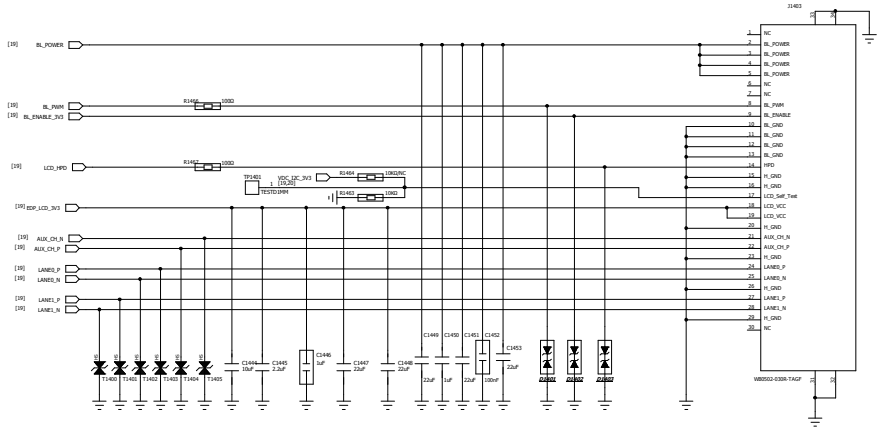

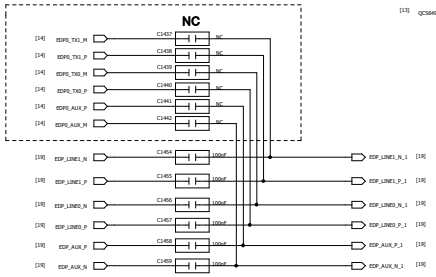

DC_12V

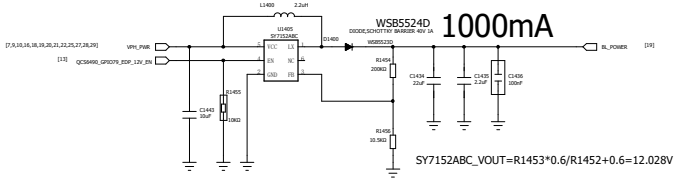

MODEL	MC937	VER.	V1.00
TITLE	14_LCD/EDP		
DRAWN		DATED	
CHECKED		SHEET	14