Fix old SPI Flash -- Add AT25DN512C-SSHF-T
Fix 5V reg VOS line (goes after inductor)
Fix enable line for all*
Fix 10uF Cap size after Inductor
Fix reset line to add all GRST including HUB
Fix input power capacitor sizing (6.3V is too small)

Regulators

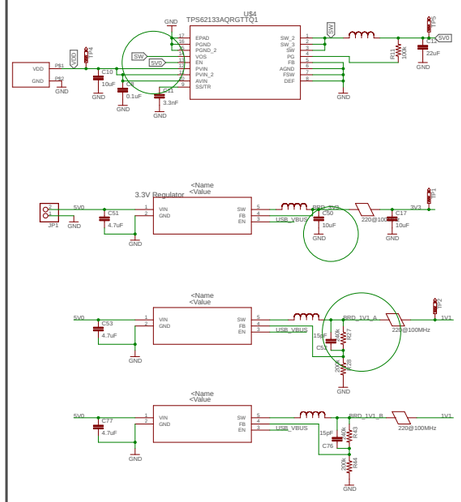

SSD Interface 1

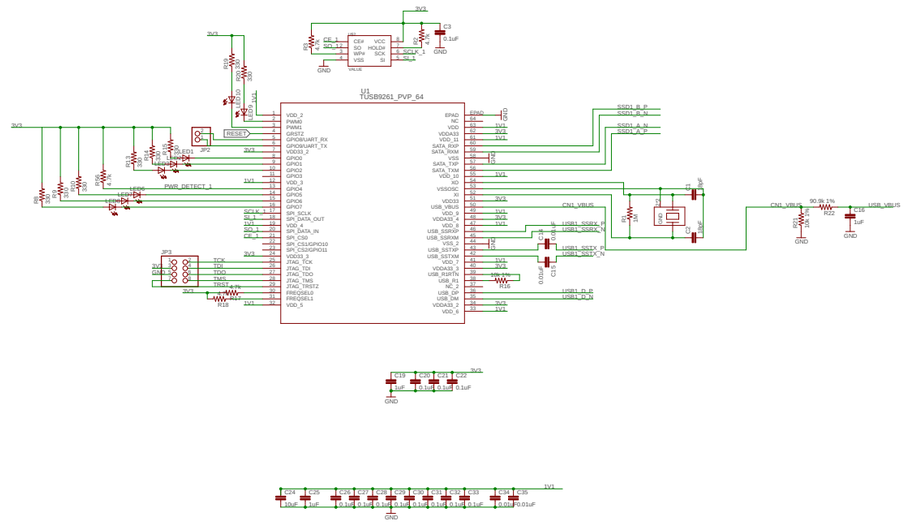

SSD Interface 2

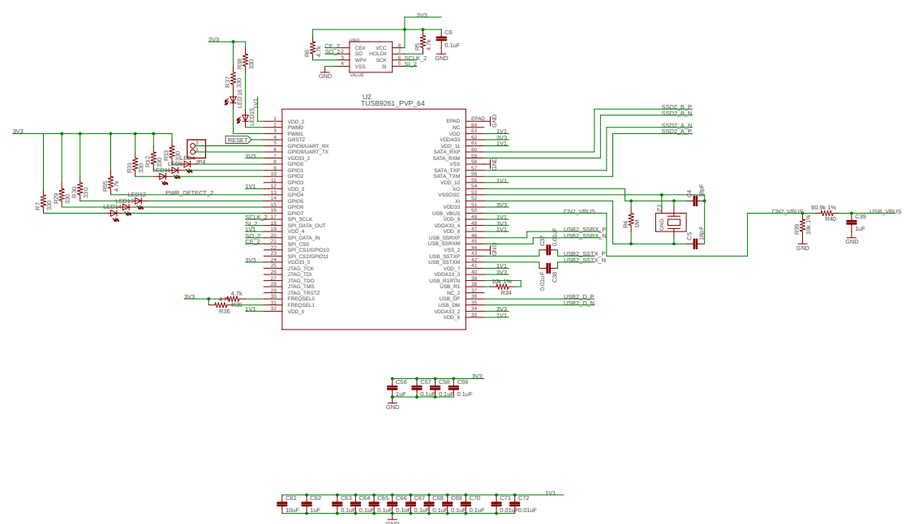

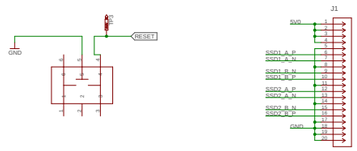

Future Notes and Changes

1. Change two buck regulators to AP3418KTR-G1DICT-ND
2. Serial Communication for debugging
3. Remove/change JTAG Connectors
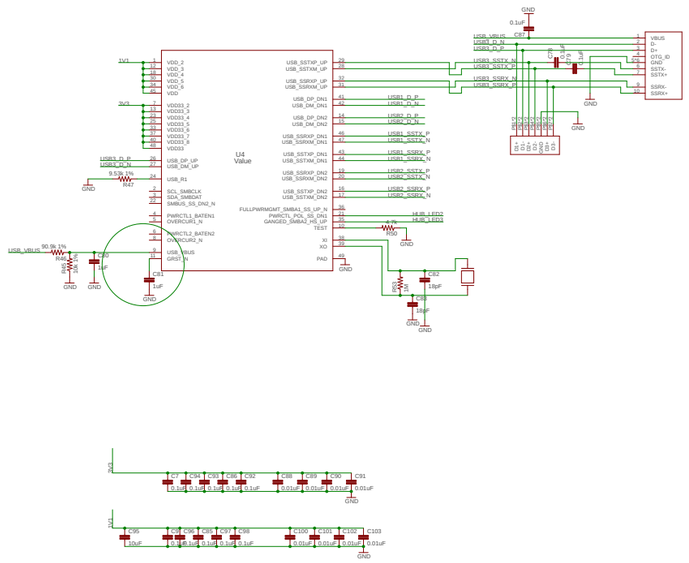
USB3.0 Hub